REC'D 31 JAN 2001
WIPO PCT

P1 347363

THE UNITED STATES OF AMERICA

TO ALL TO WHOM THESE PRESENTS SHALL COME:

UNITED STATES DEPARTMENT OF COMMERCE
United States Patent and Trademark Office

January 24, 2001

THIS IS TO CERTIFY THAT ANNEXED HERETO IS A TRUE COPY FROM THE RECORDS OF THE UNITED STATES PATENT AND TRADEMARK OFFICE OF THOSE PAPERS OF THE BELOW IDENTIFIED PATENT APPLICATION THAT MET THE REQUIREMENTS TO BE GRANTED A FILING DATE UNDER 35 USC 111.

APPLICATION NUMBER: *60/200,872*
FILING DATE: *May 01, 2000*
PCT APPLICATION NUMBER: *PCT/US00/16381*

By Authority of the
COMMISSIONER OF PATENTS AND TRADEMARKS

P. SWAIN
Certifying Officer

PRIORITY DOCUMENT
SUBMITTED OR TRANSMITTED IN COMPLIANCE WITH RULE 17.1(a) OR (b)

jc715 U.S. PTO
05/01/00

Please type a plus sign (+) inside this box → +

PTO/SB/16 (2-98)
Approved for use through 01/31/2001. OMB 0651-0037
Patent and Trademark Office; U.S. DEPARTMENT OF COMMERCE

Under the Paperwork Reduction Act of 1995, no persons are required to respond to a collection of information unless it displays a valid OMB control number.

PROVISIONAL APPLICATION FOR PATENT COVER SHEET

This is a request for filing a PROVISIONAL APPLICATION FOR PATENT under 37 CFR 1.53 (c).

JC541 U.S. PTO
60/200872
05/01/00

INVENTOR(S)		
Given Name (first and middle [if any])	Family Name or Surname	Residence (City and either State or Foreign Country)
Richard C.	Walker	Potomac, MD

☐ *Additional inventors are being named on the ___ separately numbered sheets attached hereto*

TITLE OF THE INVENTION (280 characters max)

PERSONAL PFN SYSTEMS FOR ACCOUNTABLE TRACKING REMOTE MANAGEMENT AND AGGRESIVE CONTROL SCENARIOS

CORRESPONDENCE ADDRESS

Direct all correspondence to:

☐ Customer Number → *Type Customer Number here*

OR

Place Customer Number Bar Code Label here

☐ Firm or Individual Name	Henry N. Wixon, Esq.				
Address	C/O HALE AND DORR LLP				
Address	1455 PENNSYLVANIA AVENUE, NW, #1000				
City	WASHINGTON	State	DC	ZIP	20004
Country	USA	Telephone	202-942-8400	Fax	202-942-8484

ENCLOSED APPLICATION PARTS *(check all that apply)*

X	Specification *Number of Pages* 105	X	Small Entity Statement
X	Drawing(s) *Number of Sheets* 9	☐	Other (specify)

METHOD OF PAYMENT OF FILING FEES FOR THIS PROVISIONAL APPLICATION FOR PATENT *(check one)*

		FILING FEE AMOUNT ($)
☐	A check or money order is enclosed to cover the filing fees	
X	The Commissioner is hereby authorized to charge filing fees or credit any overpayment to Deposit Account Number: 08-0219	$75.00

The invention was made by an agency of the United States Government or under a contract with an agency of the United States Government.

☒ No.

☐ Yes, the name of the U.S. Government agency and the Government contract number are: _____

Respectfully submitted,

SIGNATURE _____ Date 5/1/00

TYPED or PRINTED NAME Henry N. Wixon, Esq. REGISTRATION NO. *(if appropriate)* 32,073

TELEPHONE _____ Docket Number: 112756-700

USE ONLY FOR FILING A PROVISIONAL APPLICATION FOR PATENT

This collection of information is required by 37 CFR 1.51. The information is used by the public to file (and by the PTO to process) a provisional application. Confidentiality is governed by 35 U.S.C. 122 and 37 CFR 1.14. This collection is estimated to take 8 hours to complete, including gathering, preparing, and submitting the complete provisional application to the PTO. Time will vary depending upon the individual case. Any comments on the amount of time you require to complete this form and/or suggestions for reducing this burden, should be sent to the Chief Information Officer, U.S. Patent and Trademark Office, U.S. Department of Commerce, Washington, D.C., 20231. DO NOT SEND FEES OR COMPLETED FORMS TO THIS ADDRESS. SEND TO: Box Provisional Application, Assistant Commissioner for Patents, Washington, D.C., 20231.

PROVISIONAL APPLICATION

FOR

UNITED STATES PATENT

To all whom it may concern:

Be it known that I Richard Clark Walker, have intended certain new and useful improvements in:

PERSONAL PFN SYSTEMS FOR ACCOUNTABLE TRACKING REMOTE MANAGEMENT AND AGGRESSIVE CONTROL SCENARIOS

Of which the following is a full, clear and exact description:

DOCKET # 112756-700

RELATED APPLICATIONS

This provisional application docket number112756-700 claims priority claims priority from U.S. Provisional Patent Application docket number112756-600 which claims priority from U.S. Provisional Patent Application docket number112756-401 which claims priority from U.S. Provisional Patent Application docket number 112756-500 filed June 15,1999 which claims priority from U.S. Provisional Patent Application docket number 112756-400 filed February 26,1999 and U.S. and PCT International Application filed January 15,1999 docket number (112756.202) incorporated herein by reference .This application is related to U.S. Provisional Patent Applications Nos. 60/071,392, filed January 15, 1998 (112756-201), 60/089,783, filed June18, 1998 (112756-300), incorporated herein by reference. This application is related to U.S. Patent Application No. 08/975,140, filed November 20, 1997, and PCT Application No. PCT/US 97/21516, filed on November 24, 1997, which claim priority to U.S. Provisional Patent Application No. 60/032,217 filed on December 2, 1996, all of which are hereby incorporated by reference.

BACKGROUND OF THE INVENTION

Field of the Invention

This invention is a parallel development of the accountable Primary Focal Node (PFN) for equipment, machines and vehicles involving machine messaging and networking by interfacing communications, mini computers, sensors , activity controls and event memory storage to create accountable management and remote control systems and product.

Here however, the same technology is detailed as a personal PFN in that accountable telemetry is being provided for people, pets other living assets and or mobile objects that may require or benefit from accountable monitoring, management and remote control interaction. Varying degrees of this invention are detailed out in this application for commercialization from mere tracking to a fully interactive personal PFN system .All systems are capable of providing accountability for their telemetry. This separate invention is being deliberately defined and isolated out from the machine messaging PFN systems for a number of reasons. But basically, to be able to write law and regulations to it's personal use, which will be an intricate part of any commercialization for all the PFNS but much different when involving people a majority of the time.

So this patent application will explicitly deal with the unique conditions surrounding tracking individuals and performing accountable remote control and management via the personal PFN invention. It will cover the use of aggressive remote control and management through the belt system detailing it's technical capabilities. This patent application will raise all the necessary questions that societies must review in determining the proper course, use and protocols for those individuals and animals that can enjoy more freedom through the invention, while they still requiring a guarded state by law and or for public or personal safety.

But most importantly this personal PFN has many benign and benevolent attributes and uses that can ease the every day worries in protected care situations without intruding on another person's privacy, their movements and their enjoyment and in many case perform guarding angle services at the individual level in real-time. There are many technical safeguards for this purpose and a strong discourse detailing the major concerns on using this technology in a respectful and social manner to help construct law and

regulations, as well as, provoke attention to individual respect and manners for proper use of this technology by everyone.

Commercially the most effective way to offer these innovations is by spitting them into man and machine categories due to how law and regulations will be applied to the actual products and their uses. Fortunately commercially this works well with existing manufacturers and in this type of development the personal PFN technology this can best fulfill it's commitment to aid in the process to organize accountable remote and automated control as has been the purpose and goal of the PFN invention from it's inception.

So therefore this application will combine throughout the specifications and claims all forms of wireless communication to perform personal tracking and accountable remote management and control functions involving man and animals particularly, but also descretes as so determined and defined by this inventor. This statement is stated presently because both the machine messaging PFN' and the personal PFNs described in this application have been created together thus far. This application is being constructed to separate and deal more with personalized PFNS. In the past they have been jointly written too. So therefore, to remove any possibility of legal and commercial discourse or mis-understanding; I Richard C Walker the inventor state; here and now in this document that I retain sole delineating powers as to what is considered Personalized PFN's and or what will be considered Machine messaging PFNs and how any of the specific technology is to be licensed between these two separate technical categories and eventual commercial entities. These decisions would of course be predicated on any legislation governing the uses and application of this technology.

With that stated: all communication mediums detailed throughout the related patents will be utilized to create these personal tracking and management systems and the specific configurations as stated in this patent. So, any modalities that essentially perform

the same tasks even though they utilize changes in parts or components of these systems are considered the same as these personal PFN's and therefore, fall within the nature and scope of this innovation "The Personal PFN "

Brief Description of Drawings

Figure 1.

Figure one depicts the first of three major different communication modalities. This figure deals solely with Radio Frequency (RF) equipment connected to GPS equipment.

Figure 2 and 2A

_The next two drawings Figure 2 and Figure 2A are first a new drawing detailing the two way paging systems and also 2A is a previous depiction of two way paging and GPS system for personal movement use (from an earlier filing)

Figure 3

This figure is of the original PFN Cellular phone and modem system called the Complete Card ™ Research In Motion LTd. RIM ™ also make a similar product as do many others both in analog and now for the ever present digital phone system CMDT and DMTD. These changes still are within the nature and scope of the invention.

Figure 4

The PFN technology will always be current because it has been created to consolidate wireless communication data processing, sensing, activity controls, and event memory storage in one organizational interface platform and make an accountable system. The PFN has always been designed to incorporate Commercial Off The Shelf Products to a (COTS) in a user friendly fashion plug, program and play where ever possible. So this figure Details COTS products and system service providers to provide personal asset

accounting to all persons cost effectively no matter what their economic position is. e.g. Person tracking or family tracking through the home TV. Ect.

Figure 5

This figure displays the easiest modality and a large number of the accessories available to the personal PFN it is not meant to be the only modality or form the invention will be constructed in. This drawing goes into more detail as to the construction of a belt system and it's purpose and all the other drawings are used to discuss the different communication systems separately but do not detail the belt structure.

Figure 5A

This figure was from an earlier filing detailing a Personal PFN system worn on a belt .(it is numbered in 22 part description numbers with it's accompanying text from the earlier filing. This will be changed in the formal application and is only used in this form to give a complete description and tie in the earlier filings.

Figure 5B

This is also a figure from an earlier filing and has the number 18.and will be handled the same in the formal

Figure 6

This figure lists some of the initial commercial products and possible names they might be marketed under.

Summary Of The Invention

The invention is a personally carried Primary Focal Node (PFN) which has as a base function to provide locating data to a remote location for a person or asset either wearing the device or having the PFN device fixed to it. Further sophistication of the device provides the same kind of accountability and protection considerations for this personally

worn PFN that is designed into all other PFNS as detailed through out the related patents. This means that variations of the personal (PFN) will range from just performing locating functions to performing an array of accountable aggressive remote control functions for application specific needs with local and remote memory storage for these events. The system's telemetry might well incorporate or provide audio and video data as well as supply Electronic Serial Number ESN data for the device and personal identity information and deliver physical telemetry of the wearer. Of course, the specifics of any particular product variation will depend on initial purpose cost and practicality. However, the initial variations of these personal PFNS are (basically determined by the type of communications package used) and PFN variations might also utilize additional processors, activity controls, memory storage, and locating systems in the same manner as has been detailed through out the related PFN patents or for the equipment PFNS. And conversely these communication systems and locating systems can also be used and applied to any of the earlier machine messaging PFNS for mobile and stationary applications.

In this application the products of this innovation have been broken out into four categories delineated by the types of communication systems they employ. The first system employs Radio Frequency (RF) equipment and uses this example as the prototype employing family radio walkie-talkies with a frequency of 462mhz or 467mhz. To transmit and receive GPS data from a Garmin 135 GPS receiver antenna, which has it's NEMA data string modulated on this carrier wave by a Tigertronics mini modulator. Then the this signal is received by a Kantronic's serial modem that demodulates the signal and sends it to a lap top or desk top computer, where it is converted by Automatic Positional Radio System (APRS) software shareware to provide longitude and latitude coordinates with a time marker to be applied as an object to be placed on calibrated bit maps such as Delorme's Street Atlas. Then by employing a software Macro in this case EZ Macros the zoom key is

constantly triggered to zoom in on the closest detail map from the default overlay map in the Delorme street atlas map program. This makes a very effective close in tracking product that keeps the asset in the center of the computer screen, while showing the whole neighborhood and stepping down to a few hundred feet around the asset or the personal (PFN) tracking device. This is done to reference the viewer and is accomplished with the combination of three software programs that are integrated to run together.

This application will spend only one drawing on the generalized concept and use of the software placement of an object on a calibrated map as it is used in the prototype for the two way radio system for this personal innovation of the PFN. This is done because the different communication systems will be writing their software command strings with IP and proprietary application level programs. However, the object placement can be achieved in the same manner if so desired. So, this is why the entire process and product has been constructed as an RF prototype and an intranet, because commercial arrangements must be made with these large communication, Internet and TV providers first. But regardless, the technology is proven through these feasibility prototypes and should help to interest these venues considerably. There is some greater detail given to some of the security applications with one figure devoted to a possible mandatory wearing of the system. The feasibility product combines three Commercial Off The Shelf (C.O.T.S) software products to create this tracking system and effect and additionally employs a limited range two way family radio with a 2 mi maximum distance in the prototype. Many modalities to increase the distance and indeed make it limitless here on earth are detailed in this application and the related patent applications

This RF version of the personal (PFN) could use most all radio frequencies , but most importantly the federal authorities FCC need to sanction and set a side a frequency and protocol for this application and use by the general public for public safety. This system can

handle multi-users by assigning call names or (ESN's) in the modulators to be recognized singularly or all units that are transmitting on the same frequency can be viewed on one computer . And if multiple frequencies are desired a scanner circuit and software function can be employed in the transceiver connected to the modem on the computer side so that in cycling all PFN stations transmitting are picked up and placed on the calibrated map system (providing privacy locks are not in place).

This is the technique that is used in the repeater function for all multi-communication capable PFNS for limited range RF. Ideally the Federal Communication Commission (FCC) will allocate a 911 type response system that uses special RF frequencies for public safety applications and certain public safety protocols including FACT program controlled scan lock hardware and firmware that can be employed to govern all special dedicated frequencies in PFNS in time of emergency (this is part of the TRAC/FACT system detailed in the related filings. These protocols could have software or software embedded firmware in the PFN hardware architecture, as well as, any other communication devices to perform emergency routing of a priority communication that need to be relayed longer distances. This would allow numerous simultaneous communication strings and pathways to reach an emergency response center (911 program, ect.) where they would be appraised with the mass data management program for the best two communication links, while dropping or clearing for regular service all other systems and equipment that initially responded. This would happen very rapidly and the process would be handled through software algorithms in the programing. This should be a program developed in conjunction with the Federal Access and Control FACT Software program detailed throughout prior related applications.

For these short range RF systems this repeater function would provide long distance capability through either stronger or more powerful radio systems within range e.g.

(PFN connected) or they would process the signal in the FACT TRAC software of the PFN employing the emergency communication protocols to re transmit the emergency data on to the 911 center via Pager systems, Cellular Phone systems, or any wired or wireless communication system available to the responding PFN. This processes is described in earlier related patent applications and for all RF systems the process used in the APRS software would create a cellular web for any short range signal. The PFNS would have a software poling algorithm performing a scan function for repeater stations and programming digitpeating software commands (communication strings) in real time for transmitting the signal to a preprogrammed destination or closest 911 response service. Also 911 center would have a powerful RF transceiver and auto response routing system . The automatic area poling software would create a mobile cellular web. After the initial contact string from the mobile PFN the controls would be determined through the software in the 911 center indigenous to the area and carrying the algorithms to determine best reception for mobile communications in the area. However, if the communication lock is a hand off to a pager or cell phone traveling near a sole RF PFN the 911 phone service would provide the link and the software poling would occur from the center of other cell and pager systems receiving th RF signal and switch to them as an automated process.

This personal PFN system has been basically a parallel development to the machine messaging network PFN (involving vehicles, machines and any equipment),throughout the related patents. So therefore it uses the same types of communication systems that have been detail earlier. It is necessary however to detail out these systems further for their use as a personal (PFN) so that anyone skilled in the art can construct these products. As was stated earlier this personal PFN innovation varies in it's product architecture basically, by the means that it uses to perform it's communication function. The next system delt with are the two way pagers.

Two way paging provides a means to transmit NEMA data in small packets and for the most part this is all that is needed for a GPS system to send tracking data back to a special web site or E-mail address that is running the appropriate software at the IP final application level to place an object on a calibrated map on the screen of a computer. By the same means as described for the (APRS) or RF systems) In this application however the ESN of the pager identifies the tracked PFN system and an Icon can be chosen as well as a screen name, which would all be part of a server or provider's running a software system. Their algorithm through look up files could find the two way paging PFN in a running buffer review file of last known transmission with NEMA GPS coordinates. This file receives and stores all transmitting Pagers they provide this service to and then a software instruction in a lookup function will retrieve location data (NEMA ASCII POCSAG, ect.) that is stored in the buffer and post the object on the appropriate calibrated map, along with the time the GPS position that was generated. (part of the NEMA clock Data received by the GPS Receive that is physically connected to the pager or integrated into it. This would be a service and apart of the pager providers web page in one modality, making all the software a system product for the paging provider. Another modality and Product of this PFN technology would be an individually purchased software recognition program bought by the pager owner and installed on his/ her's personal computer, laptop, palm pilot organizer or PFN ect, that receives their two way e-mail message. This software product would have a calibrated map package, and a program to reconstruct the GPS signal (depending on the system used and the form it is placed in by the pager interface. This is a proprietary product of this invention even if it is only in the form of a pager being located by triangulation on the pager signal through the known location of the receiving towers and placed on a calibrated bit map via a software algorithm. In this case it dose not need to be connected to a GPS receiver to be tracked. Of course Kline and Walker LLC. The assignees of this personal

tracking and PFN technology will seek out pager and cellular phone providers to commercialize both types of tracking systems and develop this proprietary set of products. Cooperation with programming with the proprietary software key codes and some algorithm writing with the wireless phones and paging systems who are presently serving theses markets is all that is needed to develop this product for their customers.

The integration of radio and GPS as well as Cell Phone and GPS are also product evolution's stated in earlier related patents as falling within the nature and scope of this invention and reasonable developments inside any PFN as well as the use of multi-communication systems . Which combines Radio with paging and wireless telephony i.e (analog and digital) Throughout all the related patents this has been the planned development of this technology as an integrated consolidation of circuitry planned and described for the PFN hardware systems and product developments . Therefore the use of these combined technologies and or the COTS products that have recently combined communication system like Nextel and Garmin who have combined analog cellular phone with their GPS. These are COTS products that can be used in any PFN through Plug, Program and Play procedures with the use of COTS software e.g. Fagawi to perform remote tracking . However, Analog cellular phone tracking will be come extinct with the loss of analog cellular service but an interfacing product none the less. With Digital CMTD and DMTD becoming the market preference all PFN cellular service will be constructed with the service providers products but will be backward and forward engineered to accept older products for as long as they have service.

Returning to the Pager the RIM pager systems and the Motorola page writer 2000 are two units that supply access port to send messaging through the pagers transmitter so long as the data is in a format that the pager protocol requires to handle the data (in special packet form). Other systems than the Flex and reflex Motorola paging systems have

also been detailed in the earlier related patent applications. Also, other variations to interface with pager technology have been detailed. However with paging manufacturing providing the physical connectable systems and interface protocols the combination of 2 way paging and GPS as well as two way telemetry have been made far easier than before and much more likely that multi communication devices will share service in PFN's as well as interface with all sorts of activity controls and sensors as has been detailed in earlier related patents and exemplified here for telemetry data (NEMA) in tracking. Obviously

A private intranet could be created with a calibrated software map library on a personal Email address equipped with the software program that processed the NEMA or text data delivered through the paging protocol to the Email address and place the two way pager's location on the proper calibrated map for the solo user or small business user. Thus two way paging with GPS is another viable means for Personal PFN Tracking or for the Machine messaging PFN's. detailed more extensively in the related patent applications.

Cellular phones is the other technology utilized by the Machine messaging PFNs and these personal PFNS and tracking devices as stated in the pager technology will emplor automated triangulation in some applications which **can replace the need for the GPS system as a locating component saving space and power use.**

This technology originally used the Complete PCMCIA Card ™ for the cellular service to the PFN but presently details more options now and the fact that the service is primarily becoming digital and controlled by the cellular service providers . So Kline Walker LLC s will seek out a coordinated effort to offer this service product in all three levels through the PFN detailed technology, which are analog, digital, with individually owned tracking software interfaced with these communication protocols, and a total system approach where the software is provided by the cellular server on a web site or as a hypertext link through

Internet providers. Much more detail on the cellular systems is in all these related PFN applications

Figure 1

Figure one depicts the first of three major different communication modalities. This figure deals solely with Radio Frequency (RF) equipment connected to GPS equipment and interfaced to modulate NEMA location data strings by modulating, either ASCII , TTL binary coded messages or any communication software over radio frequencies. This diagram depict the modality used in the present the personal PFN prototype. The drawing is general but clear to anyone skilled in the art to recreate this invention for personal tracking. It also should be noted that there are many modalities to achieve this same RF Product but any and all fall within the nature and scope of this detailed invention . Another important note is that these detailed modalities are also used in the Machine messaging modalities applied to vehicle equipment and machines, but these are being detailed here as commercial variations and products as Personal PFNs specifically for people, pets and special assets as defined by the inventor.

Object 101 is a two way hand held radio in the case of the prototype it is a small family channel walkie-talkie operating in the frequency range of 462 mhz-467mhz. The dark line between 101(radio) on the left and 102 the modem on the right represents a Mic. Line and a Speaker line as well as a signal ground line. These lines connect on the radio to the Mic jack port and the Ear phone jack port and share the same chassis ground which in this case serves as a signal ground. The right end of the mic line connects to a serial input pin labeled TXD for transmitting data and the speaker line connects the RXD for receiving data from the RF component. 102 the modem in the present prototype is a Kantronics 1200 RF modem and it has a 9 pin serial connector provided in the standard configuration for receiving and transmitting data as well as supplies a pin for the signal

ground the last connection for the right end of the left wire. Then from 102 the modem to the laptop or desk top computer N0. 103, the line to the right of the modem has a 25 pin connector that goes to a 9pin serial DB connector in the back of the computer #103. Because most GPS NEMA protocols run at 4800 baud rate the prototype is set at this rate in the computer 103 and uses comport 1. However the RF modem only runs at 1200 baud to transmit and receive over the walkie-talkie so this in the rate of this prototypes system. Down below in this drawing is the belt system and GPS transmission section that sends the mobile location data stream to be tracked on 103's computer screen.

104 is a second walkie-talkie also having a Mic port and an Ear port set of jacks. This time the Mic TXD line from the radio is connected to a Tigertonics Module 105 which is a quarter of the size of the 103 modem connected to the computer. This is accomplished with a J11 phone jack the same as used for standard phones and also used in this technologies first vehicle PFN prototype to stop the unauthorized use of a vehicle detailed in earlier related patents. This jack has TXD, RXD and signal ground connections provided through a removable J11 connector. The input side of the Tigertronics module 105 has a 9 pin connector that can be connected to a GPS antenna object # 106 in the drawing. In the case of the Prototype this is a Garmin 135GPS receiver. However experimentation with Delorme has also been done. All the GPS antennas are not the same and they run different software communication programs in their firmware. For this reason it is important to know if you are working with Binary codes eg. Rockwell serial or ASCII or TTL or reversed TTL in choosing the modulator 105 and the Modem 102 as well as the proper software programs to the GPS data. at the application level for the calibrated Bit maps on the computer 103. The hardware connection from 105 to GPS 106 must support the functions necessary to satisfy the GPS 106 receiver protocol for transmitting as well either with the DTR Data

terminal Ready of the RTS ready to send signal as well as support the TXD and Signal Ground.

NOTE: Product hardware consolidations will combine the part 106 GPS receiver with the modulator and or demodulator circuits 105 and the radio transceiver 104 in one board in it's tightest configuration with special consideration to the RF antenna and GPS antenna for interfering with each others performance for the personal tracking belt and system.

For the monitoring function the modem circuit or demodulator 102 will be on the same IC with 101 the radio transceiver or receiver component. This system can also have a AC power cube /DC converter for 6–9vdc to either charge the radio/demodulator unit or just power it. However this system would either have it's own power source or be able to receive power from the power pin on the DB9 connection on a laptop for mobile movements.

To reduce cost further this product for personal tracking only has to communicate in one direction . Which means the personal tracking portion on the belt need only a transmitter and a modulator with a GPS receiver, and the monitor portion only need a compatible demodulator and radio receiver with the interfaced computer and viewing monitor.

Before returning to the computer software to run the tracking function with these connected hardware products and components a moment must be taken to explain the power systems on the belt .

Power is provided by either a rechargeable battery pack on the belt for the mobile operation with (accessory solar cell strips with velcrove stick-ons for hat or shoulder pad mounts that plug into the belt power pack. A temperature sensor on the battery packs disconnects the solar cells if they reach 109F (experimental charge regulator process for Ni Cads, Lithium, and Alkaline. Temps for safe charge not equated at the time of this

provisional). Power first enters the modulator105 the passes though the power switch and fuse and then enters the modulators voltage regulator circuit and is passed out pin 9 on a standard DB9 serial pin to energize the GPS receiver. Battery ground exit Pin 7 to the GPS receiver completes modem and GPS power requirement with additional 5 volt regulator installed to adjust power to energize the hand held radio unit that is interfaced as the transceiver. This basically is the prototype at the present time, however in the products to follow all sorts of telemetry is possible, as well as, providing accountable remote control and management though the two way communication and memory storage components. Other components on the belt system will provide a locking clasp and security line that detects the real-time removal of the belt or tampering and reports and records this activity for authorized conditional freedoms ect.

Returning to figure one to discuss the software used to create this feasibility prototype. The software running 103 the computer to utilize the NEMA GPS location Data generated and received thus far are as follows. The initial software to handle the RF modems software NEMA code data is the Automatic Position Report System (APRS) software shareware protocol. This program converts the received data into GPS coordinates to generate and object on a calibrated map. For the Prototype the Delorme 6 edition of Street Atlas is employed however maps can be created and calibrated as a library file and the APRS software will pace the tracked object on those Map . These two base programs place the object on the map but in most cases the overlay default map in these commercial products is to general and they do not support a continual zoomed in view on the personal belt location, when combined with this APRS share ware needed to update the small movement of an individual walking ect.

The zoom feature serves a most necessary purpose and function of these personally worn locating products, which is to instantly and continually acclimate the viewer to the

area. To accomplish this a third piece of software was required to make this a great product. The objective was to zoom in on each update and hold the zoomed in position in the center of the computer screen and repeat this process at each update (timed at 9 seconds for the prototype -but adjustable). The present prototype zooms in from a approximately 7mi radius to an area of less than .1/2 block. This is accomplished by using a Macro and keying the computer key board function to zoom at the desired time to the most detailed bit map in the library . Of course a zoom out to a national view is equally obtained if so desired

Kline and Walker LLC in the development of these products will work directly with the calibrated map companies like Delorme, Garmin , Fagawi, Tiger maps and or any government mapping programs ect to accomplish these functions and make these personal PFN commercial products more user friendly for the general public. These functions will be easier to create through the proprietary software commands after knowing with the correct software codes. This is the main modality to make these products user friendly.

Once again this is not the only modality to create a personal RF PFN Tracking System and any number of frequencies can be utilized through this present modality and many are named in this technologies prior related patents. But this is an easy to understand way to create a feasibility prototype of this invention to perform inexpensive short range personal telemetry of an individual or pet's movements. It also supports all the feasibility necessary to prove this technology as a personal PFN system for all the detailed communication modalities.

Additionally this range can be increased by different radio systems, repeating or digitpeating though other radio stations such as amateur radio or ham operators, or by repeating through other PFNS either equipment PFNS or these personal PFNS that can pick up transmissions through programmed scanning capability or by programmed digital transmissions which respond to emergency protocols or digitpeated commands as a

transmission string. This software is running in the APRS shareware program. Additionally, the hardware consolidation into an integrated circuit configuration for these interfaced components or devices is a regular activity for anyone skilled in the art of reducing and drawing up IC boards for radio frequency equipment. Meaning any product resulting from this inherent described and predicted process is all with in the scope of the PFN invention and should not be considered unique, therefor falling within the nature and scope claim of this invention.

Note: From the first description of using short range RF systems in PFNs a repeater function has been detailed and described as a major function for providing long range capability out of small radio transceivers. In all the prototypes in this application short range RF systems are employing the 2 way family radio frequencies of 462. Mhz and 467. Mhz. These are by no means expected to be the only frequencies for these applications . All of the applications will have to receive government approval from the countries governing agencies such as the FCC here in the United States.

FIGURE 2

The next two drawings Figure 2 and Figure 2A are first a new drawing detailing the two way paging systems(fig 2) and also 2A the previous depiction of two way paging and GPS system for personal movement use. They are being shown together in this applications to substantiate the earlier filing of the idea and to bring all these personal tracking and PFN

devices in to on area for commercial development. Both the old and the new drawings and descriptions will be covered in this pager section.

In figure 2 on the left side is a computer either a Laptop or a desk top computer with three numbers on the left side. The numbers are 201,202, and 203. These show the

possible commercialized products that can be provided from a pager locating system. In this pager locating modality a GPS receiver is likewise utilized . But also the pagers locating system a signal triangulation algorithm in the system software

Note:

So the use of a cellular phone or paging service software running a triangulation algorithm using the fixed position of the towers for cellular phones and or two way pagers, to locate a specific transmitting pager, phone or combination device's position in relation to the known position of the towers.

This technology is claiming this technique to locate a specific two way pager's transmission signal as an alternative locating modality for both types of PFNs (for people and equipment units) . This system will save space by removing the need for GPS in many cases where service is good and the need for a large battery. This will be a much improved modality for this innovative locating device in the future which will be provided as a product improvement by inheritance for this technology. Kline Walker LLC will strive to develop this tracking modality (Systemically) with companies like Nextel, Motorola , Bell Atlantic and other pager companies, who are developing larger short radio messaging tower networks and multi-communication systems and devices. This has been explicitly stated here and now as an other modality for this same personalized tracking device or PFN and is considered with in the nature and scope of this invention in any evolutionary form.

Returning to figure two, 201 on the computer is a commercial web site that supports maps and tracking service most probably provided by the paging service. By using the paging unit's ESN from the paging service's system software the (two way radio, or wireless telephony) would generate useable earth coordinate data obtained by distance and directional sensing equipment or functions performed by the receiving tower hardware and

firmware and send this data to a paging system software via paging system software protocols, which during the process of the signal employs an automated triangulation software algorithm based on known receiving towers fixed positions on the earth to provide at least an accurate two dimensional fix of longitude and latitude to be applied to a bit map or calibrated map program to be run as a web page, personal E-mail shared providers cable or Satellite (joint ventures with pager provider) or run on an individual e mail site through the persons Internet provider with/ IP protocols and application specific software (possible joint venture Internet provider and Pager provider)at the application level with all data transparent till the end user inputs user ID code Pin number password to bring up the tracking and location telemetry on the bit map on a computer monitor or other viewing connectable device e.g PFN assets as detailed through out this and the related filings.

Or as they received pager message packets transmitted into the system the messages would carry NEMA or GPS data in some formmat from a connectable GPS receiver that is interfaced to a two way pager (proccessing separate or as part of an integrated circuit), which when activated would allow the service software to pull up the correct calibrated bit map and pace the identified paging unit ect. as an identifiable Icon, number, symbol ect. to the computer viewer, when they entered the correct pin ID upon entering the web site as the correct authorized subscriber to the service. 202 represents the same process operated by government agencies, for conditional released of convicts or parolees. This application would allow the judicial and law enforcement to monitor restraining orders in real time along with dispatch medical staff and perform interdictor functions if need be. This technology is detailed in figure 9. Also, victims can be given alert reports and visual updates,

by automated Page messaging, Email, and telephone messaging embedded in the software command structure to be entered by the authorities . And the Government can

defray another program to cut health care cost by providing this service to the economically destitute in need of a watchful eye for the mentally handicap those with dementia, Alzheimer's suffers or the severely physically handicap where expensive nursing service can be either reduced in cost and made better from professional or a family member. More freedom can be given to the health care provider because they can monitor a disabled patient or love one in one location including vital signs while doing other activities near by. Drug firms and Insurance companies could sponsor these web site inexpensively or free with other advertisements running to pick up the cost. 203 can be a personal e-mail address where the individual has purchased the software to run on their personal equipment making it an intranet at the very least. And of course they would be capable of sharing this tracking with other agreed upon email web sites. Much of the technology has been detailed for this in the Radio frequency modality in figure one , however there is some other modalities possible to achieve this for all three of these configurations and product offerings 201, 202, 203. One of the simplest hardware configurations employs a GPS receiver 206 (Garmin, Delorme Lassen, Rockwell Jupiter ect. or a chip set and antenna Philips, Motorola ect with the appropriate op amps and connectable interface with a processor (Stamp computer) that is programmed to condition the NEMA signal into a packet of characters for the pager protocol and interface with the two way pager and send the command to the pager device 205 to transmit the GPS NEMA data packet in pager protocol to the paging service that has the software command to complete the programs described above. This of course is done by using a developer program from the paging service to interface with their protocols. Once again Kline Walker LLC has detailed this out as a commercial undertaking with a number of companies because of geographic dominence in the market place. First contact will be with Motorola's flex and reflex protocol companies in the United States and with RIM pagers in the Canada . Nextel also does short radio messaging in both Canada and the U.S. In Europe

and the European Radio Messaging System ERMS Phillips and Erricson ect. . These companies and commercial plans are being stated to increase understanding and cooperation to achieve a working relationship with these manufactures to develop the entire PFN system

.

So the RIM pager systems and the Motorola page writer 2000 are two units that supply access port to send messaging through the pagers transmitter so long as the data is in a format that the pager protocol require to handle that data. other systems than the Flex and reflex Motorol paging systems have also been detailed in the earlier related patent application . So many other variations to interface with pager technology have been detailed previously. However with paging manufacturing providing the physical connectable systems and interface protocols for the combination with any 2 way paging and GPS as well as two way telemetry have been made far easier than before and much more likely that they will be part of additional multi communication devices serve this technology's PFN's effort to act as an organizational interface platform that provides accountability for all sorts of activity controls and sensors as has been detailed in earlier related patents and exemplified here for telemetry data(NEMA) in tracking. Obviously A private intranet could be created with a calibrated software map libray on a personal Email address equipped with the software program that processed the NEMA or text data delivered through the paging protocol to the Email address and place the tow way pager's location on the proper calibrated map for the solo user or small business user. Thus two way paging with GPS is another viable means for Personal PFN Tracking or for the Machine messaging PFN's. Along with cellular and pager automated triangulation protocols (product construction and commercial arrangements will determine locating technology employed in this technology's personal tracking devices or PFNS

204 in figure 2 is another paging device capable of receiving direct two way paging and this device supports an LCD display and firmware for displaying tracking to display another remote location two way pagers location as well as it's own position from it's GPS connection or if a pager system is running triangulation algorithm to provide location from tower distances rather than GPS.

Returning to the drawing as a RIM pager 205, specifically a IP-950 pager is employed in case a Trimble Lassen SK8 GPS will be used as the GPS receiver . Through the CommRegisterNotifyPattern feature of the pager the serial port will be closed and being charged through the PFN processor running this firmware. The PFN processor will be connected to pin 2 DTR output and pin 4 DSR in put of the IP950 pager .There is already a protocol written for the software commands between a processor , Rim pager and GPS receiver in the appendix of this application , which was down loaded off the Internet from WWW.fleetcommunications.com . However the pager 205 interface communication in this modality to the GPS 206 is through TXD_A and RXD_A under TSIP/normal RS-232 for TAIP or other protocols. In this case the serial port communications take place at 9600 baud, 8bit data No parity stop-bit 1(9600,8 N.1)

The default protocol will be TAIP format. All hardware terminals and contacts as well as software commands and protocols are in Appendix I . Other two way paging products and protocols for locating systems through Motorola products like Page Writer 2000™, Create a Link II™,ect, have been detailed in related PFN patent applications 208 in figure two is the belt 209 is the power pack 210 is the clasp for the belt and 211 is the security line and or antenna which is completely detailed in figure 5. Figure 5 will detail all the specifics for the personal tracking PFN system and all the hardware connections. The belt bracelet collar or clasp system is in no way the only modality for the personal PFN to be deployed on an individual or and animal.

It may take the form of a concealed device in a garment or actually be surgically implanted in an individual or animal and powered though contrasting metals that would create a potential in the body fluids making the body a battery or have a power supply much the same as a pacemaker or an automated internal PAC or medication dispensing device. These modalities were discussed in earlier writings and details as to the protocols and specific actuators for these personal PFNs will be entered into any open PFN patent application for the technical specifications however, any and all actuators linear of rotational compete or fractional have been detailed so that anyone skilled in the art can readily construct any application specific actuator control it and energize it. Of course internal PFN implants, (Transponders) have to be small in size low in current demands, so actuators would be constructed from small actuators or MIMS micro machines as small as lice. And created at the nuclear labs at los Alomos. However, the same engineering for liner and rotational actuator applications for normal size electrically controlled devices would be employed. And obviously they would be constructed and placed with medical experts.

FIGURE 2A

This figure is taken from an earlier related patent application and it is being entered here to use the figure and description to better detail the invention and to isolate out for commercialization the personal PFN and tracking system for people and pets.

Figure 14

1401 is a belt buckle that has a special key to release the locked buckle or electronic lock or any kind of locking mechanism. 1402 is a hard nylon or similar plastic flexible strap resistant to cutting in the most practical way, that has and inner liner of nylon strap so that one or two way pagers and or a G.P.S. system like Motorola "Oncore"XT, XTsII,GT, UT, VP or Philips G.P.S. chip set mentioned earlier in this application can be secure and concealed in an protected enclosure between the two nylon straps to store these G.P.S. components along with differing levels of transmitting devices that can receive signals or

messages, transmit signal or messages, and or alert of sound alarms on both sides of these transmissions.

This 2A is Figure also 14 from an earlier PCT and U.S. filing for this PFN technology

Figure 14 displays varying levels of one way and two way pagers and C.O.T.S. paging protocols as well as voice paging applications. However, as earlier mentioned; this invention provides for short RF signal transmitters with their transmissions received by every piece of equipment that has a PFN. and will ultimately all have RF transceivers to receive these emergency priority signals and condition the signals and repeat them in a pre programmed manner over what ever long distance communication hardware that exists in the PFN to the proper authorities. This is a repeater function deserving of special consideration and is not the same technology stated hear for the pagers in Figure 14. As has been described and maintained through out all these applications. However, these types of carrying systems e.g. belt or bracelet or even clip or tape on systems and the qualities, properties and capabilities claimed and demonstrated for figure 14 are the same as claimed for the repeater technology as well. (*Note: this figure description is from an earlier patent application and is referring to repeater Rf systems and PFNs as mobile stations. For personal PFNs*)

And while they can perform many of the same tasks they are two distinctly different technologies, and are herein so stated, however equally protected in this and the related patent applications.

The G.P.S. chip set or IC board is represented in Figure 14 by #1405. 1407 is the patch antenna for the G.P.S. and this cable would be place into the belt and follow the contour of the belt to be concealed. 1403 is an extra battery in some equipment variations and a way to give longevity to the entire locator belts functions. 1406 is a speaker or a loud speaker if a monitoring protocol determines it to be the best option to send a message either via a pager or cell phone signal, e.g., Motorola reflex protocol to alert the person wearing the belt, e.g. , criminal leaving a restricted area, or child lost and a public announcement is desired to seek aid from responsible adults in the area. The speaker could also emit a loud electronic whistle or shrill alarm intermittently to attract attention to the wearer of the locator belt or band.

All of this would be initiated from a remote phone page or cell phone call. Some of the C.O.T.S. Pager products that will be used in the proto types are the Creatalink pager

processor both one way and two way. the standard one way and two way pagers (reflex protocols) using the interface technology detailed in earlier related patents e.g. current sensing as was done in the first patent and Binary/ASCII/NMEA BIN/Loran from the G.P.S. all processed into 20 bit data segments to meet the Motorola reflex protocols for transmitting return data. Either through soldered connections, or BNC connector DB9 for RS232 as already detailed. The software for these applications are available for product development for this product through Motorola and only the specific software commands must be written to create the desired functions. This is easily accomplished on the PC and downloaded into the chip set processors.

This is the case for all the interfaces described in these application and due to the many different types of combinations to achieve even this simple locator belt it is not practical to write the exact programs and in fact is much more clear to describe the functions verbally or with flow charts and list all the hardware parts and software components available for even the unskilled to write programs. Anyone skilled in the art and even a hobbyist who can read will be able to buy these parts and the software packages and write these basic controller programs in a matter of hours. This is why the functions are focused on rather than any specific basic programming command string.

1408 is a voice recording chip to give prerecorded messages as triggered from phone pages as described in the first related application for the stop and control box. 1415 is a processor if the Creatalink is not used and it could be a small stamp computer. A Stamp Ior II; although Motorola and Philips as well as Siemens Tech, Radio Shack and a host of others all make micro controllers or processors to turn on the voice chip and speaker or hailer when they receive and recognize a coded message from 1404. Or if the water sensor sends a signal (the small square [W} in 1408 indicates a water sensor which would go off if the wearer of the belt was being submerged in water. And Of course all the electronic equipment is made water proof.

1404a shows a C.O.T.S. standard one way pager with the inventions proprietary non intrusive battery peg 1409 connected to a current sensor chip exactly the same as the first patent for the stop and control box to sense a silent pager vibration activation. The chip is connected to the voice recorder chip so when a phone page is received it draws current down out of the battery peg circuit and creates a ground on one pin of the current sensor which triggers the voice recorder or howler or hailer through speaker 1406a message or noise. And or a small micro controller with a EEPROM can run firmware programs to alert the surrounding public or in a two-way pager reflex protocol application monitor 20 character bit audio sound bite of what the wearer is experiencing. And the power is supplied by the battery 1403a in the in the recording system. These systems could also use the same system as the PFN.'s and record the surroundings or report back sound and or data.. So with special monitoring equipment on hand these pager locator belt systems could call in if someone had a medical emergency or hit a panic button.

1402 is a belt on a man walking on earth. 1410 shows 4 satellite a minimum for getting G.P.S. coordinates and most systems mentioned use at least 6 satellites and as much as 8 channels are available for taking a reading in all the Motorola chip sets. 1411 (SG) tower is a commercial server or land line phone node or gateway as has already been thoroughly described. 1411 tower will pick up the page signal or RF signal or Cellular system, if these technologies are employed and convert them through phone modem and transmit that signal down a ISDN phone line or comparable to at least one computer 1412 that is running a G.P.S. program to monitor the Bin/ASCII/NMEA earth coordinates and time coordinates data transmitted to 1411. Also as was described earlier the coordinates could be monitored from the car 1413 if the car was the phone data node or the car was able to network with 1412 to receive down loads for the data of earth coordinates. All easily accomplished as described earlier .The second figure down in upper left is

the belly belt locator belt laid out flat. And 1401 is the lock buckle 1403 extra battery 1404 is the pager 1405 G.P.S. 1406 speaker or hailer or howler. (*This description of figure 14 relies a lot on the detailed technology of the entire earlier patent for the equipment PFNs so in reading this description remember it is necessary to read all the specific modalities being detailed in this application for pagers, RF equipment and Wireless phones. The drawing and concept are the main points of this figure and that the personal tracking device or personal PFN was an early parallel development with these varied communication systems and locating equipment as well as varied configurations detailed earlier as consolidations of devices into muti-tasking equipment arrays involving Telephony and location equipment including such product as mobile office units, which were designed to plug program and play with the equipment PFNs*)

FIGURE 3

This figure is the basic cellular tracking system that has always been a part of the t earlier related patents in uses the PCMCIA Complete Card ™ which is 305 in figure 3 (RIM also makes a comparable PCMCIA card with a cellular transmitter, a 386 processor for the modem and an antenna) The PFN technology has been detailed through out the related patents for anyone skilled in the art to construct each COTS component that is used to create the feasibility prototypes. But additionally a crucial component and quality of this PFN technology is to be constructed to be user friendly and produce an accountable electrical interface platform of plug, program and play user

friendly forward, present and backward engineering capacity to accommodate a large variety of devices and achieve as universal interface as much as possible.

So either of these cellular modem transceivers will function well for this variation of the personal tracking belt or device. There is also a myriad of newer cellular modems coming on the market everyday and some have protocols that provide programming for DTMF functions or automatic dialing. However this invention was also designed with an additional mini computer 307 which would perform the preprogrammed dial up functions to report the GPS 306 data to a phone line connected 304 or wireless connected 302. 307 will have local memory to perform accountability for activity controls communication and the verification of data reported for complete personal PFN functions 306 is the GPS receiver which in some cases will be connected directly to the RXD and RXT as well DTR RST terminals in the PCMCIA card connector and the proper electrical connection to energize the card to the battery 308. Many battery pack and charging systems have been detailed in this application and the related patents and will be by passed in this discussion presently as obvious to anyone skilled in the art and as inherited from one communication modality to another as detailed earlier. 309 the belt and 310 the belt clasp either locking or not (this will be described in figure 5).Of course if the mini computer is in the loop then their would be software to process the incoming data from the GPS and outputting it to the cellular modem and calling the correct number. Once again if a software protocol and standard is being used by telephoney company systems many of these communication functions will be handled there including IP protocols and final application programming to display tracking or report other reported data streams. These protocols have been named

and the developer programs have been named. But as welcome as these advancing phone technologies are to the PFN system they have been predicted and described as consolidations of communication and processing in all the related PFN patent applications and still fall within the nature and scope of the invention when employed for these purposes of accounting, locating remote management and control. Garmin came out with a a GPS Phone recently that when coupled to an other companies software can track the phones location though polling the GPS phone through call to receiver dial tone response to perform a look up function on fagawi software and maps that are calibrated and will correlate the tones to latitude and longitude which relate to a specific bit on the map. These of course originate from the Garmin GPS receiver in the Cellular phone and are processed from NEMA data or Binary code ASCII or HEX to the dial tone sounds in a micro processor with this burned in firmware then they are transmitted over the phone where they are recovered with the Fagawi software operating with of course an IP phone connection modem and computer plus monitor. This is two companies selling two products that can be put together to perform this function and this technology has been described in the PFN'S earlier patent applications and is considered another prior modality to be used with analog cellular phone RF and Pager systems to send data DTMF of any type wireless . For this technology of course the limitation is speed and the amount of data but it is suitable for tracking. This system has been used basically for analog signals and PFNS will be capable of interfacing these systems.

The real need of the PFN requires digital communications for efficient data handling. Presently most all the wireless communications are being converted to digital DMTD or CMTD for the major phone providers. This of course provides greater

security, which is the main reason for the change. This security is needed for the PFN functions as well. The next drawing is a detailed consolidation of communication systems involving two way radios, telephones, and paging systems in one wireless phone system Nextel.

This is a described combination of communication systems through out all the PFN related patent applications and fits right into the multi-communication array and plug, program and play capacity as a consolidated improvement

INTERNATIONAL COMPONENT NOTE:

Research In Motion Ltd. RIM is a company in Ontario Canada and the manufacture of wireless communication components that can be utilized as an other modality in constructing this invention the either the personal PFN and or the equipment PFN. Even though some of their components have already been detailed in earlier communication modalities e.g. RIM Pager-IP(Internet Protocol 950 for pager tracking in figure 2's description they like Nextel have many of the communication capabilities to provide either singular communication components or a combined array in the PFN. Plus they have different market concentrations and slightly different product quality offerings in their respective markets.

Before entering the combined communication array of Nextel and it's modality in the PFN technology a close look at Rim's OEM Radio-Modems prove to provide some other components for yet another modality to perform all in one cellular, processor interfacing that can support GPS or data streams to be handled as Telephony gateways to IP computer monitoring for tracking by placing mobile GPS/Nema data

objects on a calibrated map. Through a tracking software program either running in the computer or a system software transmitting data to an individuals computer or even an other wireless Ip device. Once again just by running a triangulation algorithm that factored the reception towers position in the providers software rather than to have a GPS component with it's additional size, power requirements and difficulties in receiving in buildings, makes this tranagulation system software technology have some very important attributes that can be a great improvement or enhanced in any product offering for these PFNs. Especially the personal PFNS or personal remote tracking devices. Or in conjunction with GPS provide a ground signal component to the inaccurate commercial version of GPS in PFN applications that will require pinpoint location accuracy in 3 dimensional tracking (much like the 4th earth reference signal used for military accuracy with GPS to adjust for the ionosphere deflection of the satellite signals sent to the earth bound GPS receiver units. This is accomplished with through a software algorithm using both sources of location data and (fuzzy logic). This system will be used to acurately guide vehicles on the roads with other sensors communication functions and video imaging as has been detailed in earlier equipment PFNS.

Returning to the Rim high performance RF transceivers . And the first point is that these could be used to provide Radio close circuit systems at an approved frequency and in embedded in a system as described in figure 1 to give great range to a close circuit system with 2 watts of power to the antenna in essence these units would replace 101 and 102 and 104and 105 as two combined radio/modems on either end of the communication between the GPS unit and the computer from bottom to top in figure

1. Of course the software and firmware configurations would be essentially the same and there would not be any reliance on towers in general. However this also could be a possibility.

The main purpose in naming these Rim Radio Modems 902M and 801D and 802D RIM Radio Modems is that they are operating on 900mhz and 800 mhz and function through basically cellular or radio messaging frequencies and protocols used by the wireless telephony industry companies and their provided IP gateways. This of course is another communication option for the multi-communication array capability of PFNs in general.

For this reason Kline and Walker LLC will seek to develop this inventions products. That will employ these components through the modalities in this application and the related application in the respective geographic market areas. This would include in Canada Research In Motion LTD , The owners and operators of Mobitex packet-switched narrow band n s t work, which is designed for wide-area wireless data communications. The operators or service providers would include, BellSouth Wireless data in the U.S. Bell Mobility in Canada. Also for the 800MHZ RIM's 801D and 802D where DataTAC® is the narrow band wide area wireless communication network . Kline and Walker LLC would seek in the commercialization of this PFN invention ARDIS in the U.S. and Bell Mobility in Canada. Others would be sot in other international markets like Asia Australia and Europe as they employ DataTAC® or Mobtex or a compatible packet radio software for these frequencies or one those wireless systems so designated by the governing authorities.

It is important to remember that much of the PFN system is designed as a data acquisition system, as well as, an accountable remote management and control system that's primary objective is to aide in the responsible use of resources and equipment both environmentally and economically for all societies in a fair manner. This is why the use of various manufactures in their areas of market dominance are named and indicated as part of the PFNS technology business plan and market strategy. Also and especially, for the equipment use PFNS Kline and Walker LLC will seek out the World Bank and the International Monetary Fund to aid in addressing economic and environmental impact issues with the use of this PFN technology . The PFN system was created to prepare accurate data for the public and private interests groups to review in real -time so that the most cost effective beneficial decisions based on real data, education, deliberation that reesult in an all points bottom line reality check presentation can be used in making proficient commercial, environmental and social decisions, regarding investments and projects so that the cost of negative public opinion is reduced, while encouraging private, and public investment and understanding in the process that is presently receiving poor public review. ideally the PFN system will reduce time, money and resource waste on policy that is clearly un-beneficial or even corrupt and badly in need of public trust; and conversely help to educate all to support those worthy pursuits that are beneficial and develop a better quality of life, an economic tool to relieve social tension for a peaceful coexistence. The PFN factor can become an accurate economic tool for appraising any financial endeavor or investment made by any Company, Government, Bank ,or project, ect., especially the equipment and

environmental PFNS detailed in the earlier related filings. The PFN system could be a condition of securing investment funds . This accountable data acquisition tool can aid to provide financial stableness to the investment process including the stock market.

Definitely ,when used by responsible individuals in a free and fair world the PFN system can be an optimum tool to develop trust, and a quality life as is so greatly needed in this populated earth where population management, environment and resources fairly and efficiently balanced for humanity to be supported in it's physical existance.

Figure 4

Motorola's Nextel systems as combined COTS products

Integrated Digital Enhanced Network service (iDEN)®

Combined digital Cellular with Motorola's Nextel Direct Connect® a digital 2 way radio for instant private and group conversations and text numeric paging in a single phone This system has greater security for communication data. As a primary communication device in both the personal and the machine messaging PFN's these Nextel and Motorola protocols will be a good step in interfacing and organizing COTS communication products in PFN's (both personal and for the machine messaging systems)

The Nextel Direct Connect® system operates like a two way radio through the system routing function deciphering digital message headers of preprogrammed ESN address and quickly routing a communication link to the correct hand held unit or units. This technology will function well to create intranets for machine messaging in

the PFNs involving machines, vehicle and equipment and for personal PFNs, such as the ones detailed in this patent application and the related patent applications

However, due to Nextel's use of a limited range of carrier frequency for all their functions, most communication systems in PFNs will still require a transceiver unit with scanning capability and function covering at least some other specific radio frequencies (emergency channels ect), pager frequencies, and cellular phone frequencies(that have emergency protocols that will be handled by the PFN processor or have software or burnt in firmware(for repeater functions or digitpeating signals) in a combined communication device constructed in the future. When these combined communication functions and locating systems are consolidated and integrated to perform accountable messaging they fall within the nature and scope claim of this PFN technology and are also claimed as COTS interface products which have been described in earlier related patents prior to these latest Nextel phones products e.g.(i500 plus™,i700plus™, i1000plus™

Shot Message service SMS paging in a PFN when interfaced with the PFN is one modality to provide one and two way paging to any PFN, and as part of a Nextel product offering secure cellular digital phone service and simulated two way direct Radio protocols a most Ideal way to perform accountable remote control and management. These systems are conserving space in the PFN. And with an additional memory function available to the paged messages in Nextel's SMS this could act as a local memory loop required in the PFN for accountability . Of course, the entire phone or this memory function part would have to be contained in a protected area physically and electronically from tampering. Also, the web page control system could utilize

Nextel software to send a remote control page to a PFN either personal or to an attached piece of equipment to perform an accountable remote activity and record that command in the system buffer(Mass data Storage System) as well as an local memory supported in the PFN. Then other software Macros can be written and employed to key stroke commands in these running software programs on web pages to further automate the process, or by knowing the appropriate key code for the software program enter the commands to become an operating component of the running communication software program. Of course for PFN mobile tracking any of the communication systems can be employed to send any NEMA /GPS data back to a personal web site so long as the software is appropriate at the application level to place the coordinate data with the right identification data as an object on a calibrated map on a computer screen, monitor or interfaced TV with Video Game Map Program. Or processed by commercial TV server boxes. (This is a new concept for a cheap product for those that do not have a computer.) (a video game software program that is a calibrated map program and could be hooked to an RF modem interface w/proper connector , or inexpensive phone modem interface, to receive the Personal PFN's locating data and place the located object position on the correct map on a regular house hold TV--- or this service can be offered by the cable and satellite TV people in conjunction with cellular phone and pager servers through communication links (IP, ect) that routes to the subscribed recognized PFN ESN signal with NEMA GPS or any location data .The PFN / ESN signal is ID by the communication device being served (may also carry PFN/sn) then the communication server sends the data stream to the subscribers cable , satellite, or computer provider or web site or E-Mail address (as directed by an accompanying

command communication string that is created by the subscriber at the time of acquiring the service – this is entered into the systems operational software so that the location data (or any other telemetry) becomes available to the account holder or their authorized persons, when accessed by a specific pin number or security code, which will unlock the transparent data or encryption in the final application software (either local or systemic run) for these end users to view location and see any data telemetry from their mobile PFN asset. Either on their regular TV, or computer monitor (other such viewing devices may include wired or wireless lap tops, palm tops, organizers, GPS handheld units with communication capability, Cellular or wireless phones or pagers with displays and appropriate tracking software named here as separate personal PFN technology devices and variations, or displayed by a PFN system equipment or personal version). These descriptions have been detailed as a PFN priority system for tracking assets inexpensively for people, pets and their personal objects involving and employing a variety of devices. It applies to both the personal PFNs and the machine, vehicles and equipment PFNs. It can be operated as an intranet on limited RF equipment for limited distances or it can be a limited intranet through repeating or digitpeating through other PFNs as relay stations. Or, it can be a closed circuit intranet by IP protocols and proprietary protocols detailed above till the data reaches the subscriber at the application level, where personally owned and operated with a phone modem computer and software. Or the subscriber can authorize their communication provider to route their personal tracking or PFN telemetry for any data through an IP gateway to the Internet via commercial private, public(Gov. or Non Profit gateways) or, the inhouse communication provider's IP gateway link can be the route for sending the data to a

common company owned web site for general viewing. Or subscribers personal e-mail wear the Internet provider supplies the posting software to convert the signal to display the telemetry data through the correct software and viewing screen architecture for e.g. tracking (maps), physical telemetry (graphs heart rate, BP, ect), multimedia ,video, audio ect) (windows based ,ect). Or servers sponsoring advertisements can provide this service for a nominal fee, either with individual security (transparent and encrypted, ect which displays individual views of subscriber assets, or as a mass posting with zoom in clarity on a subscribers particular asset that was made as a personal request to see location (by clicking on) – (all willing responders presently being displayed could be viewed or cleared from the screen by viewer preference).

NOTE: All transmitting devices for 911 protocols such as emergency systems manned or automated, would possess this application level software in their system to process or view all transmitting devices or to activate their FACT public service section to route repeating or digitpeated PFNS in an emergency application. These tracking or telemetry subscriber services functions are preprogrammed with the ESN communication number, PFN SN, ect to be used in a transmission header (transparent digital binary code, ect.) . And also preprogrammed is some form of personal identity check for authorized users of the system and function like PIN numbers, ect, all of which is submitted and programmed at the time of application during the service purchase. This is where the communication command strings are entered to create this PFN network communication and information technology, ideally handled by accountable PFNS, because of remote and systemic redundant memory storage for

catching fraud and hacker criminals, with anti-social immature and irresponsible behavior.

These two above proprietary tracking system were detailed here as a set of product lines that can be accomplished though the web using GPS or wireless Cellular (or RF or Pager) automated triangulation to derive location coordinates. And it is a good initiation set of products for co - development with Motorola or Nextel, ect. to be a part of developing this technology to provide accountable PFNs for personal and machine use world wide for better management of equipment time, environmental resources and the control of waste from the individual to the largest corporations, banks and governments. Kline and Walker LLC will be seeking out Nextel Developers Program in an effort to work collaboratively in this above development. Also many feasibility components are Motorola parts.

FIGURE 4

This drawing shows multi communication systems interfaced, which is one major organizational function of the PFNS. So the drawing incorporates Nextel's present technology and protocols as another Commercial Off The Shelf (COTS) Product for multi – tasking communication in the two different categories of PFNS; Personal or Equipment PFNs. It is not a panacia or optimum multi-communications service for the PFN protocol, but it is a step in the correct direction to offer a organized accountable scanning function for dedicated RF, wireless telephony, and paging systems designed for PFN protocols. Plug, Program and Play consideration will of course be designed into all PFNS to utilize the Nextel system and Kline Walker LLC will seek to construct PFN product and protocols with Nextel and the prior mother Motorola to

provide the PFN convergence scanning devices and system for a multi- communication platform in the PFN along with the FCC (other related government agencies) and standards committees to assign frequencies and protocols for a communication convergence emergency cellular network (a PFN system protocol and part of the TRAC/FACT program functions detailed in earlier related filings). Figure 5b is an earlier patent application figure detailing the convergence of paging radio and telephony wireless in the PFNS.

The top half of the figure details the use of computers, and or TVs as everyday monitoring systems to operate personal tracking in the least expensive manner and to add product to this technologies base systems and grow sophisticated accountable personal PFN for remote management and control. This is done to provide product to all economic levels and systems that can be built on as one has the capability or need to do so.

401 is a home based PC either lap top or desk top model. And 402 is a regular house TV. 401 is connected to an standard land line phone in 413 through an internal computer phone modem and is capable of receiving any telemetry data from a personal PFN GPS tracking along with other data streams though Internet protocols interfaced with varying types of Internet gateways basically Packetized RF, Paging, cellular phones or wireless phones analog or digital systems CMDT and DMDT by operational software products provided by service providers and prepared for Internet protocols (IP). These personal PFN products and personal tracking products will be constructed in conjunction with Nextel , Motorola, Research In Motion LTD and will range from recreational tracking and hobbyist devices on isolated systems to serious

accountable systems connected to intranets and the Internet initially starting with tracking functions but capable of expanding to complete all the functions of a PFN universally constructed to accept all applications. *For these commercial carrier products cost will vary with function and the extent of the system. All the technology is defined within all the related patents. The cost, profit and product pursuits will be determined by market strategy and knowledge of pubic desire for these product offerings.*

412 is a serial RS232 modem that is capable of handling packet identified or binary Data, Hex decimal data ASCII NEMA protocols and or TTL. This 412 modem has the option of being connected to 409 a radio frequency either short or long distance but most generally local unless operated by a licensed amateur radio person using short wave equipment ect bouncing off the ionosphere around the world. These systems

Programmed to digitpeat though an APRS system to connect to an IP Gate way has no limit to sending long distance tracking, either by programmed RF stations or the above Telephony and IP providers however transmission conditions may create reliability constraints in some circumstances.

409 short range tracking (Tot Spot) communication can be obtained inexpensively through another modality for the economically compromised (not owning a computer) through the TV and a game style software program caring the calibrated map library the APRS software along with desired zoom functions retrieving the digital data from the 412 modem connected to the game control input connector. Of course 412 would be connected the same as is done in figure 1 and the short range RF would be

the personal tracking belt would have the same as the protocol and architecture detailed in figure 1 as well as commercial products consolidated in integrated circuits.

The service providers for the two way Pager systems, and wireless phones would use triangulation locating to the known towers and provide the IP hook up through a intranet to area cable providers as a product to sell to cable sub scribers where they would run a software program for the subscribers to view their children on their own home TV or make a request for specific alerts for when their children were past a certain distance from e.g. the house. The cable providers world run this in a mass data management computer and the base technology of tracking an asset on the screen is the same as figure 1. This would also be a service sold to the satellite companies where they are dominant in the market place .

Up-links and requests are possible for Cable Satellite and Web TV to personalize program service even through TV remotes, and phone land line

COMMERCIAL NOTE: Kline and Walker in the development for the personal tracking and PFN remote monitoring, management and control claims sole proprietor ship for any variation of this product. Which is to track a person pet or a piece of equipment though any wireless pager or telephony systems that is interfaced by IP ISDN ISP or any fiber optics phone rooting system or device, microwave light transmission and provided as a cable, **satellite** or web TV product to a subscriber to either the TV server or the phone provider or both this also extends to any machine messaging and or monitoring management data as defined In any to any of the related PFN applications. This also extends to any two way component either involving the

phone systems or the TV systems either as a combined software interface or as hardware connections .

Kline & Walker will seek out all the same phone systems and pager system as well as Direct TV and Media General Cable ect. and the Internet providers AOL, Errols ect. for the computer area. This is one way to allow parent of all economic strata to afford inexpensive device to track their children and pets on their own TV as well as receive other Data streams from their child's life experience, when they are not able to be with them or want to be in the back ground. Ultimately the least expensive will be the two way pagers that are tracked through triangulation from the receiving towers and processed by the paging provider and transmitted to the correct TV provider for the pager subscriber for tracking. Still a new technology in the locating system might keep this cost up presently but it will quickly go down with volume. (Of course as detailed this can be done in all the modalities detailed in this application as well as all the related PFN application.

The software will be written to allow a parent to switch to their family channel on their TV and poll their programmed ESN PFN family units and watch their real-time activities. The tracking and object placement of a specific PFN will be accomplished by the same method involving calibrated maps and building architecture as previously detailed. Split screen application will advantage those that have to monitor the disabled, while viewing regular programing.

Or those that need close guarding. And of course gov. tracking of conditionally released people and animals that need to be sent to involved parties can be sent to those

individuals directly through their own TVs .(Also monitors can view both parties simultaneously)

Returning to figure 4 405 is the belt that is completely detailed in figure 5 406 is the Nextel Radio Phone Pager combination or a radio or a cellular phone 407 is a pager basically two way and 408 is a GPS receiver if this is used for locating the personal tracking system or PFN.

FIGURE 5

This a drawing depicting the many attributes of a personal PFN in the form of a belt , collar harness bracelet, bracket or circular securing device. It is not meant as the only modality or the best modality for carrying out the person or animal PFN set of systems. It is merely employed here to display many of the functions, configurations and uses of this versatile invention. And primarily all personal tracking with accountability and or remote control and management for such an individual device falls within the nature and scope of this invention.

In figure 5 the belt or collar system is displayed in the closed attached position as viewed from the top as if attached to some one or an animal. And it is also displayed as laid out in a lower view. The belt has a lot of accessories and it should be kept in mind that in many cases not all accessories would be used however the design of all PFN systems is to universalize a base system in which inexpensive plug and play accessories can be added to the system as desired. The belt systems components will be constructed to allow for varying bracelet/ belt/collar/harness sizes to use the same electronics.

500 in the belt itself shown in both configurations top and bottom of the page, 501 at the very top is the buckle which will be detailed further as 510 and 511. 502 in the top and bottom vie is a video cam system with audio pickup (Digital or analog -size and cost will determine component) 503 shows a top view of a finger thaw for an individual to place their index finger, ect. into upon an identity request either self generated locally by the personal PFN processor on the belt or as a remote communication request from an accountable monitor management and remote control system (Gov. Police agency, hospital or monitoring medical staff. The finger thaw can also be used to determine pulse rate. Of course the sensors are different and if both functions were used simultaneously different trans mission circuits would be configured if not hardware wired separate functions would be completed by switching components such as IC's microprocessors and firmware preprogrammed. The main PFN processor will be capable of coupling up to a desk top/laptop desk top and have flash memory burned into EPROM's to run different accessories or accommodate change in functions. Of course if this is a security system crucial code keys timed access and pin numbers as well as any number of security measures will be employed to insure only the authorized personnel make any programming alterations. Programming will also be employed to ready the mechanical lock system in 510 to open . This system might require one key with a resistor in it much like the GM vehicles or a card swipe like hotel doors with a magnetic strip or the use of a smart card or chip and reader

or a signal sent remotely or inputted though a restricted connection port on the personal PFN system. All of the technology to construct these modalities is detailed in earlier related patent applications as preventive means to restrict the unauthorized use

and access to equipment PFNS. So these same or similar modalities can be applied by anyone skilled in the art to construct a secure locking mechanism for the mandated belt application. Of course all these systems would be tamper resistant and capable of detecting and initiating an alert mode that can be configured to alert locally and give prerecorded voice message instructions or alert the remote monitoring addresses and they would be capable of sending preprogrammed messages (either from the remote management system or stored locally) or communicate real-time communication instructions from remote operators either audibly or by text message to an LCD if an accessory or part of a component COTS product service for instant message or text messages.(earphone and collar Mic will be also accessories to help the individual wearing the belt with instructions and directions in a discrete manner—e.g. a useful protocol for the recent parolee and mentally or emotionally challenged. Of course 519 will have a panic button to get help from the remote management support system in real-time for the wearer of the belt system.

519 is a sensor array which will have a serial RS232 or comparable protocol more probably a USB system connector(at present), nevertheless, all such possibilities are well documented in the prior related PFN applications. It will connect with a unibus cable system running through the belt labeled 507. 507 will be capable of supporting physical connections in various positions around the belt for accessories and the PFN processor or COTS component processor system will be able to drive the components through burned in software programs installed through a computer with the specific commands that are appropriate for an explicit application. The reason that COTS processors are mentioned here is because as has been detailed through out the PFN

invention for man and machine is the continual consolidation and increased functions of product offerings and the PFN platform is designed to be an accountable organizational interface to perform remote control and management for society. So, it is important to point out that these COTS products and integrated circuits of multitasking devices are all with in the nature and scope of the PFN invention.

NOTE :For this reason Kline and Walker LLC will seek out all these named electronic manufactures and service companies in a cooperative effort to marry up and interface in the most economical fashion and commercially beneficial means for all including the end user. (in other words if there is engineered product that can be obtained through a specific modality preferable to a specific manufacture and their engineering staff that full fills the PFN protocol and any standard for such product application Kline and Walker LLC will cooperate, license and work to enhance and complete these products and systems in as amiable manner as possible for all. The major objective being to organize the PFN system and networks to provide accountable activities and management so badly needed for public safety and the environment , while insuring a good fair and just respect for individual's rights and their privacy. These PFN systems are designed to enable and provide more freedom for life's learning experience, while helping to safe guard public and personal safety through real-time remote management and control when needed. Objective PFN Accountability is the management tool for respect for all.

519 is representative block of many possible sensors e.g., water sensor, breathalyzer, body temperature, radiation or hazardous material detector e.g. the Nose, drug detector, pressure detectors and any measurement transducers that can create a

unique electrical signal (Analog, or digital, current sensing, TTL, or digital Binary ASCII Hex decimal or any special data protocol like (NEMA) to provide data to the PFN processor, 513 which is handled by the software and firmware preprogramming for response locally and systemically through reporting these data streams to any remote location. This process is well documented with many modalities throughout all the Prior PFN related patent applications

501 the digital camera is also detachable and can be held up to the eye to transmit an image of the iris of the eye to allow for system software presently IBM, Lockheed, or flash 21 digital to confirm identity through secure wireless transmissions timed and reported with GPS location coordinates. This has been discussed in earlier related patent applications for equipment PFNS. With processing and memory continually being reduced in size identity software will be running local as firmware burnt in as application specific software in product protocols to complete on location identity checks as well as needed.

504 are contact nodes that can press or conduct through fabric or are provided portholes to make contact with the skin either as sharps or liquid conductant released at the appropriate time to enable a low current of amps and high voltage to disable the wearer of the belt e.g. a Tazer gun function either by a commercial COTS system adapted for this purpose with the trigger mechanism wired to an output function pin of the PFN processor and pulled high or activated to dissipate the short high voltage charge to disable the person or animal. In an other modality this invention would construct this entire system out of a capacitor and relay system with Toshiba driver to operate the relay triggered by the stamp computer or processor(this process already detailed for

other applications. The capacitor is energized from the power pack and re energized automatically each time it is fired or dissipated. **(Of course if this system is employed the wearer would be informed and medically examined to insure that there is no risk for mortal or fatal damage e.g heart attach or seizure in an activation. – This is an extreme measure system and would have strict protocols and rapid response teams accompanying this action.) (The system would be made as impregnable as possible and tamper resistant with alerts accompanying any attempt to deactivate or compromise the system.**

517 is another extreme Personal PFN control measure. It is an automated medicating device in which a sedating dose of medicine is given remotely or locally by the appropriate authorities with much the same response protocols for it's application. Of course the the wearer of the belt would be evaluated for tolerance and effectiveness of the medication used and their general physical condition. On top of 513 the PFN processing and memory unit is another connection point indicated by a dark round oval. This connector is also a multi-pin connector and would support telemetry leads attached to sensors for a heart rate and a blood pressure transducer cuff around the ankle to retrieve blood pressure. These electronic signal would be sent to a remote attending medical staff and recorded in the accountable memory both locally and remotely with audio video location data and time and date markers. The remote management team would monitor the effectiveness of the dose and have a second medication available like adrenelin or steroids to reverse the dose or halt any allergic reaction, while the emergency behavioral response team was in route.

Of course these medications are just an example and medical protocols standards and regulations would have to be set by the appropriate authorities and medical personnel. PACs and automated medication system already exist but this technology has created many remote actuators and anyone skilled in the arts could construct the proper device to complete a successful calibrated injection. The proper dose would be already known and installed in the injection cartridge. If 506 alcohol sensor, the breathalyzer or chemical and or drug sensor flagged positive only minute sedative increments would be possible by the program if a violent state was still in progress, while constantly polling heart rate, blood pressure, and respiration through an elastic sensor on the belt. Or possibly 504 shocking system would be used as an alternative or a guided pepper spray canister or compressed tear gas would be activated from the top of the belt buckle. Any and or all would be available to the remote and local behavioral teams to help save or minimize injury to a victim while regaining control and management for a negative situation involving the conditionally released during re- assimilation or managed freedom into or with society.

Note: Of course this is not being recommended for those that are considered a threat to society e.g. the criminally insane, ect. But those that have marginal social problems substance abuse (intermittent or questionable tendencies toward violence, but are not jailed or found guilty of a crime or are awaiting trial (Bond condition) and can use help, guidance Or those that are going to be released early back into society and or those that know they have a problem and ask for additional help by in watch dog situation .

506 leachate alcohol sensor is placed in the small of the back (lumbar) region and sponge covered to allow perspiration to collect and be sampled for pH and aromatic changes that take place during the consumption of some drugs like alcohol. This sensor another transducer will generate a specific signal back to the Personal PFN computer and resident software program for an appropriate preprogrammed and or remote controlled response or for monitoring and management decisions for the conditionally released as an early warning to a possible at risk situation for the individual and or the public. Coupled with real-time ,time/date and location data from the GPS 514 through 513 the processor and 512 the communication system in use on board the remote management and control behavioral response team can be there at the critical time to give protection and serve all parties. 515 is a power pack to be determined with a solar cell for recharging. However, the solar cell would be connected to a area of the body most likely to be exposed to the sun like the shoulders or head. This is discussed in this application and earlier related applications.

518 is to be a event memory storage for applications that require a larger event storage that is provided in the 513 processor area. These memories storage devices could be flash memory, or Sony Memory Sticks™ or any of the memory technologies detailed in all the related PFN patent applications. Also they are protected for accountability comparisons with redundant off board memory storage.

509 just below the unibus 507 that connects all the components physically and supplies power to all the components is a large black line. It can be seen in the top closed view as well depicted as one continuous line. For the mandatory wearing of this belt when the buckle lock is closed and sealed this line is a continuous connection

through the buckle and impregnated into the PFN computer compartment which is also enclosed in a tamper resistant package with alert systems(local and remote- a topic well covered-because it is the same application specific protection for all essential components as detailed for all PFNs to be of practical service to be accountable systems) Here 509 caries a special signal generated at one end of the line on a out put pin from the 513 processor and received on an input pin on the other end of the line and the pins reverse their function from input to output by a running program in the processor that also measures the resistance or current levels to detect if anyone has interrupted it or attempted to jumper any connection. Many random signal oscillating firmware programs could be utilized and this is just one modality to insure that the secured belt is not tampered with . Of course any such tampering would set off a flag in the tamper program and all alerts would be activated. 515 power exchange for recharging is accomplished by recharge able batteries at home and an emergency power source enclosed in the protected processor part. This emergency power system will be capable of powering all essentials as determined by application specific protocols. With all the detail in all the related applications anyone in the art can design an appropriate power circuit for the application. Once again 510 will be a physical locking system as well as an electrical system and will also use many of the same physical and electronic circuits for locking applications as have been detailed previously . These systems ma be pined and riveted or secured like police manacle locks and chains with harden steel. There is no limit to the best way to achieve a secure system. And all of are within the nature and scope of the invention.

The basic focus of the belt system thus far has been for incarceration or early release or mentally or emotionally compromised with social disabilities. This belt system or any of the personal PFNS or tracking system have great purposes for just about everyone. It is important to remember that not only are there different modalities to perform tracking and accountable management and remote control for personal PFNs but there are varying degrees of product that can be bought in sections at different times and interfaced through different communication paths for all kind of needs and reasons at different times in a persons life. This is one of the major goals in developing the personal PFN structure with the many manufactures and service providers and to develop a universal plug and play system that can have software burned into it at anytime for different purposes. The Federal Access and Control Technology FACT is well documented as an intricate part to the PFN technology and will not be detailed here , but through the PFN organizational system of accountability PFNs can be configured in anyway for most any purpose. not just used in this belt configuration

Additional Sensing harness or apparel to be worn.

Just like the collar or belt system the under harness or wearing apparel will have wiring and sensors that can provide physical telemetry back to a PFN system for processing , recording and reporting to the proper support staff. The system will be able to support automated medicine application systems through secure communication links that require close monitoring while giving real time data as to how the patient is reacting to the prescribed and administered medicinal therapy. Conformation of all orders and telemetry will provide accountability both locally and remotely. These systems can also be used to monitor individuals found to have legal social problems due to substance

abuse to help manage and control dangerous human behavioral situations where there is a clear legally acknowledged and confirmed problem recognized by all parties. society and the individual and the use of this system is a condition for increased social freedom with legal and qualified monitoring control and management staff available in real time to all parties at risk. This is not proposed for those found to have uncontrollable violence problems and the use of the system would have to be closely planned regulated and watch dogged by legislators, the justice department and civil liberties.

This system could also serve well for the mentally incompetent

From the second PCT patent many personal PFN product offerings are discussed and this section is being quoted here to merely display the early variations and configurations of the PFNs and that the Belt configuration in figure 5 is merely just one such product offering.

PERSONAL PFNS FROM PRIOR FILINGS

MODULAR COMPONENT INTERFACE PRODUCTS

Another configuration could take the form and still function as a small carrying case (like an entire brief case or woman's purse) which would hold a persons desired electronic device array (a mobile office, etc.). This entire case would have a connector (USB) probably on the case or an IR communication port so that it would either jack right into the vehicle secure box or optically communicate with the interface system either where a space was provided for it internally or connected to the connection array bus or (USB) on the front of the secure compartment. And this way the owner could use the interfaced case, charge its components or individual devices and, if so desired, protect it in transit or when s\he was out of his\her car.

There are many manufacturers creating mobile offices out of brief cases that have cell phones, modems, laptops and G.P.S. system for the business man to use on the road , but none that report back location per/se. Ideally these personally carried component systems would be stored and used in the tradition and protection of the

invention's secure containment system because of the high cost of the devices. Some existing briefcase products do have chargers but they are not interfaced with the automobile's TTl, analogue or digital logic control system. This is a great benefit to the consumer with this personally owned and operated vehicle diagnostics system and interface. S/he immediately has accountability for any actions taken in the repair of their vehicle and they can have direct contact with any service provider, who can look at the same data give advice and prices or dispute another service providers diagnosis and pricing.

Basically this was taken out of the earlier PCT patent application to show personal PFNs as mobile offices and their ability to interface with the machine messaging PFNs to provide diagnostic functions. The main point being that personal locating devices that report their location to an other location and different forms of personal PFNs that perform accountable remote management and control are all with in the nature and scope of the PFN invention no matter the configuration.

FIGURE 5a

FIGURE 22 This is another prior configuration of a Personal PFN fro an earlier filing

It is a product to keep track of provisionally released parolees. The numbers in this figure still appear with figure 22 numbers. The illustration will be changed and the text edited accordingly in the formal filing.

Track a Con.COM This system would allow for parolees to be back in society while their movements and activities were monitored and governed by an automated computer system that would track physical movement through GPS, or LoJack or Cellular and or RF triangulation on a personally carried device that monitors body temperature, pulse rate and provide for positive Identification e.g. Finger Print or eye iris evaluation

The device would be controlled by the master controller and support local Web page access and hyper-link capability. Tactile and galvanic sensors would be capable of detecting chemical changes in perspiration and determine the chemical equivalent for a specific person drinking and provide a specific electrical signal that is transmitted back to the parole center for a con beep and direction to either report in or take a skin prick check or a breathalyzer. Locations of area liquor dispensing or known drug activities would be plugged in as trail markers on the GPS calibrated maps and flag a convicts questionable activities at these locations or ask for the above checks.

Prior victims of crimes that an Ex-con is convicted of will be notified via a web site and early alert notification program or system called TRACK A CON.COM and or Track A Con. Gov (or any other similar name or.Com for this purpose is here by claimed and reserved). This program will give a reasonable distance to stay away from,(procedures and program parameters to be determined by the appropriate authorities) weather it is prior victims, victim types,(children, ect) or just trouble areas for a particular parolee including other old friends (other criminal types) or geographic areas that can be tracked and or trail marked in reference to the parolees known movements, and or others in real time. Once again the appropriate trail markers will be posted as GPS, ECT. Geographic coordinates and will notify authorities and victims of flagged improper movements in real time. The convict will be alerted as will and warned to report in and move out of that area. Also, the victims can be outfitted with a mobile page and or Track system and warned directly of a past ex-cons close proximity as law enforcement is detached to protect and serve the victims safety first as a 911 response. Additionally the victim and community can track the parolee on the system by

contacting the web pages and or a tranquil audio sound or message status can be given to a victims pager, phone radio and computer system to assure the victim of the known location of the Parolee. Special situations like school officials and security staff could be paged phone called or given a red Icon on a IP connected monitor or TV server (cable or satellite as detailed in this application) The alert would be given because all schools are trail markers in the program for this particular criminals parole .(A past petafile, ect). On the school monitor or in the phone page or text message photo and descriptions would detail the parolee in the area. The alert would be given to the parolee as well if this is determined the proper procedure by the experts and authorities. Ideally a behavioral and medical response team would be dispatched to both parties along with law enforcement and parole officials. This unique and powerful public service tool can be provided less expensively, because it is dispatched in a specific strategic manner by operational protocol to be determined by the appropriate authorities specialists with constitutional and public acceptability. Commercial products can be provided as elements of this Public service tool. This will involve Insurance for all parties and governmental risk management. Bail and bonding insurance for the parolees and advocates (family or general public or governmental early release programs to reduce cost of hard confinement incarceration.)

Note: this has been detailed for possible violent criminals for controlled release into society as a tool to help evaluate if corrected behavior can be practiced and has been learned during the punishment phase earlier. It is also meant as an accountable communicative tool to aid a released parolee with adapting to a lawful way of life by recognizing the inevitable difficulties in re acclamation in society. This same technical

system can be utilized for any situation where people or animals require close observation as a public or individual recognized public safety threat. This is not a pana cia but merely a state of the art tool that can cost effectively be interfaced into society's legal structures to increase safety while better spending it's resources. There is no claim of perfection here and it requires the best out of all to perform correctly and constitutionally . Ideally the PFN's inherent accountability through local and remote event storage can help to insure evaluation and reevaluation of use and performance of all parties to help insure an optimum use. This should yield cost savings for the public and increased public safety by lessening incarceration time and help to decrease antisocial behavior developed with long time exposure to other criminals warehoused in confinement, rather than being closely guided and aided in near normal life conditions.

Earlier in this description the word automated was used . That is not to imply that this system of monitoring and remote control and management in unmanned. There is a monitoring staff of counselors. medical staff and law enforcement both in the remote monitoring centers and on the street at any interdiction.

FIGURE 5b

Is the a drawing from a prior patent application detailing a universal PFN with Cellular Pager and Radio frequency communication service . This figure also shows the service providers and many of the applications for the equipment PFNs . For this Personal PFN provisional application **FIGURE 18** from PCT will have it's items labeled with 18 numbers and this will be changed for the formal application. None of the technical content will change , however in the formal filing this drawing will show

that these communication service providers lists will be all able to support this technology's personal tracking devices and PFNs

This figure depicts a universal PFN system with some usual device applications and varied hardware hook ups to communicate with the remote locations and physically perform the Accountable Remote and Automated Control for society and it's institutions. The bold black line with universal PFN enclosed is to indicate that this is a protected area not just physically but legally. In the enclosure 1901 is a commercial off the shelf COTS cellular phone. It shows one wireless communication modality through a PCMCIA modem connection to the processor and internal TRAC\FACT software. In this application all the software is commercial off the shelf supplied by the cellular phone company and or the PCMCIA modem card interface. Obviously this preprogrammed software would be down loaded and the appropriate dial out phone numbers installed in the command string. These would be for commercial servers and or public providers as illustrated by the little man at the computer 300C, 300 L and the whole 300 networking system.

Below the PCMCIA connection block is the block called Complete Card. This is a desired modality for cellular phone use in the invention. It employs a commercial off the shelf COTS product a PCMCIA Complete Card TM. The complete card also supplys its own software and hooks up in the same manner as a PCMCIA standard modem card. However this system also incorporates the Cellular phone system and antenna. The appropriate hardware is known in the industry and the appropriate configurations can be accomplished by anyone skilled in the art to link up the euro100 boards with the PCMCIA connections. The bottom box is modem and can be part of the top box PCMCIA connection when used with telephony or with any application from the lower box 1908.

Number 1908 box shows all the different types of communication devices employed in the PFN's. 1 way Radio, 2way radio.1 way paging, 2way paging, light or sound and GPS or locating systems. These different communication devices are well covered in the in figures 3,4.5, and 6 and will not be revisited at this time. However, as this drawing illustrates they would process their data streams through the modem and on into the processor to be handled by the TRAC/ FACT/CEW programs ect. The modem would be capable of converting the applicable data steam and communication source to be used by the PFN processors. In this same block light and sound as well as any other electromagnetic wave that can be used to transmit wireless or hard wired to a converter or modem to deliver control signals to the PFN system are hereby included by reference as another modality of communication. In earlier related patent applications traffic control devices were described for authorized personnel to control in real-time a particular vehicle by pointing such a tool to a specific target vehicles receiving plate and to control a slow guide stop and secure sequence for a suspect vehicle.

1907 is the uni-Buss connector that has also been discussed earlier. However, ideally an accepted industry standard will provide a universal plug and play capability and the TRAC/FACT software and TRACS management system will insure accountability and real-time control as needed. All possible present connectable hardware was detailed in the related application docket No. 112756-202. However as stated before the plug and play capability for power, control signal is part of this technology as described in figure 6a as natural evolution of this invention. whether it is for a mobile application (car) and or a stationary devices the control power and signals to the processor can basically use the same kind of plug and play Buss. 1903 is the mini-computer containing the TRAC/FACT programs. The round circle is for the CEW program Commercial Encryption on the WEB . This software program is provided by the credit card companies and will have a special modem capability and handle 128/64 bit.1902 is a card swipe or reader that is connected to the processor either through the

uni-buss or the old R232,TTL, or PS2 type of connections. These three are shown here as the present standard connectable modalities known to present industry. However the un-Buss connector would be a more ideal modality for space greater data flow, and efficiency. These old standard connections are shown to be available to other components interfaced in the PFN and can be employed to give forward and backward engineering versatility. These would be limited in number as time went on and would have separate software command strings, with the appropriate drivers to access this different Com. Port and coupled device to complete the interface with the PFN. The device would still have to have an electronic FACT ESN or identity system or would require special registration to be interfaced. 1902 the credit card reader would be able to handle commercial credit cards and driver licenses and FACT SYSTEM identity cards.

1905 is the hard drive on going memory storage. For size reasons in this drawing the FACT application specific event memory is not shown but it is a redundant memory to the continuing running on the hard drive. The event recordings are controlled either automatically by resident PFN programs, remotely activated and controlled by an authorized external source (Logged command string) or by the resident operator or occupant. In any event all machine and man actions and interactions are recorded and logged in the FACT Memory preserved in the protected restricted access area as depicted and detailed in figure 2C , 2F and 2G.

1909 is a big dotted line which is the unibus going out of the PFN and going to activity controls video cameras (or Digital) microphones and activity sensors as well as generic host control connections. Some of these sensitive control and sensor leads will be provided PFN protection special and or utilize the host vehicles strongest architectural structure (e.g. the frame) to protect these critical transmission lines. This should be determined application specific and as part of a standards effort. I have gone though a great deal of effort to detail all the properties and qualities and give modality examples to provide a standards effort a good clear organizational system structure and

electrical interface platform to provide Accountable aggressive remote and automated control for society and it's institutions.

300C in figure 19 is the commercial server who can be any gateway node the customer picks or can be a service provider for the OEM host equipment or an energy provider or a bank card provider or a communication company or any type or number of these commercial servers. However they must be licensed and provide enough mass storage to handle all critical TRACS/FACT data to operate in any geographic area. They also have to be able to handle it in a secure accountable manner. For simplicity purposes the 300C have been placed at the bottom of the 3 basic different types of present wireless communication. To the right cellular phone system ,to the lower left of figure 19 is the present one and two way paging systems and for the lower right is the Radio frequency systems. All of these systems connected to land lines (fiber-optics, ISDN, ect) to perform any hardwired Database connections they are computer operated and act ac gateways to isolated computer networks and can provide web access on the Internet. (if need be encrypted). A sample of the types of commercial businesses that would utilize each type of communication technology has been listed under their respective areas. This is in no way intended to represent all the possible commercial uses as the PFN will ultimately be on every piece of equipment.

In the middle right the rest of the 300 system is illustrated by the large computer stations manned. The one with L.G.A.&C. SYS. Stands for Local Government, Access & Control system. And the one labeled N.G.A.& C. SYS. Stands for National Government Access & Control System. In all communication areas and in the extreme lower right hand corner is satellite and a satellite dish connected to land base phone lines. This is to show that the national registry can provide complete critical TRACS control and FACT data to it's entire geographic area and is also capable of

transferring Data internationally at the proper authorities desecration. Some of the proper government agencies are also listed but all government agencies could access and create data as could even the general citizenry for total accountability. of course specific data on individuals would not be obtainable or used unless authorized by the individual or as the result of some legal action as is the present case. Any such misuse or access would be reported to the individual and alert the authorities and the person violating a persons individual privacy would be criminally charged and subject to civil action as would any agency or commercial storage area. This means total accountability. This system has been designed to respect individual privacy. Which means that the individual has to release any licensed storage facility public or private no mater if they provide the service free of charge or not. However, Gross non descriptive data can be sold and discriminated as long as an individual can not be identified or compromised in life the pocket and the pursuit of happiness. The exceptions to this rule is that if through the course of operation a piece of machinery they endanger others (public Safety) then the proper authorities and commercial insurance agencies can access these personal records. However an individual can give permission electronically in real-time if so desired with a signature of a PIN number for consent or a verbal voice recognition or the fingerprint steering wheel, video snap shot, or a signature on an electronic pad or the iris reader and voice recognition or any combination of the above. Free service can be provided and personal data can be acquired and used if this is agreeable to the individual

Statement: This details equipment PFNS and also how they can be used with people. All the modalities are using the same belt system to depict the

personal tracking and PFN accountable telemetry remote management and control personal product offerings. At the end of the figure descriptions there will be some product break outs and names for the personal PFN commercial development and focus of this application. However, this is not all the products variations and configurations nor is it all the names the products will be marketed under.

Another application involves Cellular telephone communication. This system can employ the same collars belts and bracelets but they will transmit the location data via the cellular phone system. In some incidences these will be closed systems and in other cases they will be open to public access. Cost will be defrayed by commercial advertising supporting the network tracking software and providing security software protocols for the general public to use the two way paging system will also employ the same kind of belts and bracelets—and utilize 2way paging to communicate packets of GPS NEMA protocol data to specific Email address where subscribers or commercial advertisers operate a web site with the soft ware to provide secure individual tracking for a commercial operation-----While for the most part these systems will utilize some form of GPS NEMA protocol for obtaining tracking data and transmitting it to another remote location , this technology also plans to utilize cellular triangulation for both cellular phones and pager systems to improve indoor tracking by basing the triangulated data from powerful local transceivers with fixed positional grids and running a triangulated algorithm to provide more exact and continuous locating ability.

Note : The TRAC/ FACT program and system mentioned in this last figure will be in more detail in the formal application and is already incorporated in this application

as it is detailed in all the prior PFN applications . TRAC means Trusted Remote Activity Controller and FACT means Federal Access Control Technology. These are the corner stones for providing accountable remote management and control for society and it's institutions both in equipment PFNs and in these Personal PFNs

Figure 6

This figure is a product list and a check list of suggested modes to carry out any particular product offering.

Keeping this in mind any combination of technologies and modalities covered here and in all the related PFN Applications are possible modalities to construct product offerings as determined by any licensing

Agreements created to commercialize and exploit these PFN patents and product offerings; also the product names here are considered proprietary in every venue and market including any WWW or Internet

Address, or web page or listing or search engine.

NOTE: specific names set aside for the radio repeater or digipeater technology are as follows-

''TOT SPOT", "HUNT WELL," "PET POINTER", FRIEND FINDER,"this is not to say that other PFN technology like pager or wireless telephony may not create products bearing this name, but it will be solely reliant on the discretion of the licensing authority of Kline and Walker LLC.

NOTE: The Paging and Celluar phone technologies have **"FAMILY FINDER", "SKI SEARCHER", and "PATIENT PAL", TRAC A CON(EITHER . COM OR . GOV OR LOCAL POLICE AUTHORITY.** Once again these names may

use any of the technologies detailed in this application or any of the related patent application, at the discretion of the licensing authority of Kline and Walker LLC . The rest of figure six is a list of areas to create market product and names from listing Activity controls ,sensor systems, and functions.

Short Description

TOT SPOT ----is a tracking device to a send a child's geographic position to a computer screen organizers palm tops (with wired and wireless modems) or a TV using any of the modalities detailed in the PFN technology through out this application and the related filings

HUNT WELL—is a location system that provides map placement on a hand held wireless LCD communicator screen of no shoot trail markers e.g. (locations of other hunters wearing or carrying location equipment and supporting a beacon, houses or farms, supporting a trail marker beacon that appear on the screen, before shooting. This system and the complete product construction may use any of the modalities in the PFN technology to provide many different qualities and properties to this product. People can see hunters in area and hunters can see all beacon PFNS or locating transmitting devices (FCC and Tobacco and Fire arms should set special Frequency for this application and PFN beacon transmitters should be supplied to schools, public gathering places ect. roads and known populated areas by the fish and game people in all the states) These systems could uses solar cells and wind generators to provide powered where land lines or batteries will not be a total solution)

PET POINTER – Of course can be used with other animals (application specific attachments to the animal a consideration of course) But is basically a way to

track pets on a computer or TV screen or palm top or GPS or Cellular Phone or pager system if they support a display and a map program any are capable of receiving another's device location transmission signal, through any of the modalities detailed in the PFN technology and these devices are all considered to fall with in the nature and scope of the invention (personal PFN and tracking devices)

FRIEND FINDER or FAMILY FINDER or PEOPLE LOCATOR are all

Personal tracking devices to track people through any of the technologies many variations detailed for the PFN systems . They may be belt systems , purses, brief cases, concealed in personal valuables that normally accompany the person. These name are being applied to locating system for this purpose. Other names like

LOST AND FINDER or BREAD CRUM BOX or CRIME TRAIL BOX or THEIF CATCHER KIT

Are reserved for personal possessions that are placed in to a lockable container that will give it's location remotely once stolen either activated automatically or by the owner or the police. The systems used here can also be any of the PFN modalities to be determined by practicality . It might just as well be a secluded apparatus that is hidden in a valuable or camouflaged. (These systems can be outfitted with accountable recording equipment all part of this technology's PFN systems

TRAC A CON . COM OR GOV this system can use the any of the technologies detailed in the PFN technologies but is a operated in conjunction with law enforcement and has a protocol involving medical expertise, behavior expertise and law enforcement expertise as well as educators and counseling for the public and the parolee

sor conditionally released. RF systems used for this purpose might well include companies like Lojack and there RF systems.

SKI SEARCHER OR (SKI SEEKER) OR HITCH HIKER OR CAMP TRACKER

This system may also use any of the modalities in these PFN applications and it basically is a way to track skiers on the slopes or cross country and for them to call for help from the ski patrol operators of the ski lodge or the authorities. Can be a limited range and a system operated by the lodge or tracked by the lodge's monitoring system and personally owned transmitting systems (personal tracking and PFNS)using commercial communication providers that are IP linked or phone linked to the ski lodge. Ski patrol location system monitors all incoming sources and places ESN objects on the map as skiers. (software program monitoring all modalities of transmission can be used for other applications as well) converged is accomplished by a multitasking communication operating software program in the monitoring computer at the e.g. lodge or ski patrol headquarters and using the computers Com Ports for RF and IP phone connections for pager and phone or even monitoring through a TV cable or Satellite provider. (Satellite and Wireless systems will prove more reliable with severe weather considerations)

SWIM SEARCHER OR (SWIM SEEKER)

This is a tracking system that is water proof – All PFNs are to be in protective containment but this application is of course made water proof, also the power section has a solar cell so that when the swimmer has to float the solar cell can be

exposed to the sun to recharge the power source. These systems are made water dynamic or stream line and can use any of the modalities.

PASSENGER POINTER or BOAT BUDDY

This system will be placed in seat cushions life preservers or given to passengers onboard boats, buses, subways, trams, trains and planes to be attached to their person as a beacon to rescuers in the event of a mishap in travel. The system is normally inactive and can be activated automatically or by rescuers or the individual carrier—(protocols to determine best procedures FAA NTSB DOT) (FAA is not going to want transmission in flight. (FAA and FCC will determine frequencies used so as not to compete with black box signal in air travel or accountable PFNs on board)

PATIENT PAL or HEALTH WATCH

This system and accessory arrays track physical location time and date of application specific commands provides an interface platform of monitoring equipment, for remote telemetry and activity controls for medication actuators aggressive remote control, while providing Accountability systems including audio and video, ect as well as a record of command received prescribed therapy in two locations at least. Also a special automated 911 message can be individually programmed by medical experts or real-time voice communication can take place for the mentally lucid. All the systems are augment incrementally for patient condition and accessories are prescribed as needed.

STATEMENT BY INVENTOR AND ASSIGNEES

These product names and descriptions are listed as first products to market as envisioned by the inventor Richard C Walker. The names are considered proprietary by

Kline and Walker LLC. Once again they are not all the areas this technology can be applied to, to create product nor are all the possible products named here or listed .

Claims

The next pages of claims are from prior patent applications . They claim a personal tracking device and PFN device and system both to act as a relay station for repeater functions and also as a stand alone personal PFN. The first prior claim page is also numbered P.119 in the boarder and accompanied with the US application number on the left # WO99/36297 and world PCT number on the right PCT/US99/00919. Because it is taken directly from this earlier filing. The claims are numbered 39 through 42 and are the Personal PFN claims. There are 49 claims in this earlier filling with all 49 through the initial PCT review. The other claims refer to specifics in equipment PFNs, machine messaging systems. environmental telemetry and various other innovations.

The following page of claims is from another earlier PFN application and are included here to define the personal PFN and some of it's security applications, This claim is numbered 13. The present new claims submitted with this application have been drawn up from these initial claims so that this patent application clearly delineates the personal PFNs and tracking products through out the prior applications of types of PFNS to commercialize these products as belonging to one area. This method of exploiting the

Properties of both types of PFN technology provide the best avenue for law rules and regulations to be written by the officials and government agencies and applied to the

Page Insert 72A 11/27 56 - 700

EARLIER CLAIMS.

39. A real-time vehicle or equipment management system according to claim 20, 22 or 23, wherein at least one of the plurality of external devices includes at least one real-time tracking device comprised of at least one of a two way pager system, a two-way processor, a two-way transceiver, the real-time tracking device is interfaced with at least one of a global positioning system or integrated circuit chip set which receives and provides location data upon request via at least one of a phone page and a message to a predetermined electronic mail address on the Internet, the at least one of a global positioning system or integrated circuit chip set providing the location data to the Internet as part of a preprogrammed tracking and monitoring function for at least one of a person, a pet, and a movable or stationary object, optionally protected via at least one of a belt, harness, collar, band, bracket and mount.

40. A real-time vehicle or equipment management system according to claim 20, 22 or 23, wherein at least one of the plurality of external devices includes at least one short range radio frequency equipment coupled to at least one locating system which sends a location signal, and which receives, records any specialized message via at least one of a longer range local primary focal node radio frequency signal, a two way pager system, a cellular phone system coupled to an application specific equipped gateway provider to access the Internet and to provide electronic mail service to a predetermined electronic mail address or world wide web site addresses for tracking and monitoring

41. A real-time vehicle or equipment management system according to claim 20, 22 or 23, wherein at least one of the plurality of external devices includes a short range transceiver mounted on at least one of a belt and harness which sends a standard short range distress signal when activated at least one of remotely and by application specific preprogrammed criteria

42. A real-time vehicle or equipment management system according to claim 20, 22 or 23, wherein at least one of the plurality of external devices includes at least one of a cordless telephone and a cordless telephone device transceiver to be used as a short range communication link for data transfer and to perform at least one of accountable aggressive remote control, monitoring, and management functions requiring short range limited signal scenarios.

a RF provider pager provider, or a provider of Telephony (wireless Phones) connectable interface to a TV system of at least one of a TV cable or satellite TV provider with IP interfaced TV software system and local device firmware to;

follow the PFN or tracking device on a calibrated map program and display a unique identity marker e.g. for the transmitting device's (ESN) or encoded digital ID,

present in real-time, data application specific(e.g. physical telemetry) of at least a person, animal or arbitrary object affixed with the PFN or tracking device,

present in real time audio data, video data or any arbitrary data as may be determined by application specific criterion in the construction and purpose of any personal PFN or tracking device,

2. According to Claim 1 a further claim is made for a protective restrictive attachment system which may be provided determined by application specific needs for any PFN or tracking device and fixed to a person, pet or arbitrary object in such a manner to require unique mechanical and electrical codes or means to satisfy the locking and control system, so that only an authorized person determined by protocol will have access to remove the attachment system, belt, collar, bracelet, clasp, binding, clothing , or open any brief case, purse, box, container to deactivate or alter such equipped PFNs or Tracking devices running program;

further, any tampering and or removal of the protective restrictive attachment system, or depression of a coded panic button sequence

uses of the PFNs. The division here is clearly meant to be man and machine. Basically, what is biologically life and what is inanimate in general as far as PFN applications.

13) An independent claim is made for a personally worn PFN tracking devices that can be worn by an individual and report their location to at least one web address through a public server gateway node, or publicly owned provider node using any type of wireless communication system,

an additional claim is made for the networking use of any multi-communication capable PFN to relay or repeat shorter range signals for personally worn PFN devices that provide location telemetry and physical telemetry and can perform accountable remote control , useful functions to include tracking of criminals, monitoring, minors,

What is additionally claimed presently:

1. A claim is made for a personally worn PFN or carried tracking device that is connected and operating with at least one of a RF transceiver/transmitter, Pager transceiver/transmitter Cellular phone transceiver/transmitter or any arbitrary wireless transceiver /transmitter either digital or analog that reports location telemetry in real-time to at least one remote location equipped with at least one of an IP, phone connection or Internet web address connection computer, and monitor or at least one of

results in the immediate activation or alert sequence in the PFN or tracking device's running program to provide geographic position time of occurrence and any application specific telemetry, and also,

operates any preprogrammed alert flagged activity controls or accessories including,

any event memory storage either local or remote responsive in the system,

alerts or notifies electronically (through wired or wireless) a preprogrammed protocols determined by emergency response personnel, who have numerous connectable assets to activate as application specific settings in the universal PFN system

3. A further claim is made according to claims 1 and 2 for a personal PFN or tracking device be constructed in a manner (application specific) that creates difficulty in recognizing the device or to detect it's presence so that only authorized individuals can locate it and or access the device physically, it's data as well as it's controls.

4. A further claim according to claims 1, 2, 3, is made for personal PFNs or tracking device's to be constructed application specific with accessories for airplane occupants, boating occupants, land vehicle occupants to be used in rescue and recovery operations,

5. A further claim according to 1, 2, 3, is made for personal PFNs or tracking device's to be constructed application specific with accessories for activities including;

Skiing (snow and water) swimming, hiking, jogging, biking, camping, golfing, exposed motorized vehicle use, all terrain vehicles, spilunking, caving, mountain climbing, sky diving, gliding, ballooning, traveling, touring, site seeing, schooling, employment jobs, family use, group use, military use, government use, correctional system use, automated health care use (mentally and physically compromised), for security use, for real time census or people accounting applications (natural disasters martial law scenarios e.g. earthquake areas severe weather approaching , hostel war zones for infectious decease control crowd control e.g. conditionally released youth offenders (timely community supervision and intervention for positive gang management and control), public gatherings and counting populous (without PFN/ESN IDs) however, for crowd control in riots or marshal law and accompanied by an accountable judicial public order part of a constitutionally approved process (PFN/ESN IDs available) for rough service use , medium service use, light duty use, for any arbitrary use with any arbitrary application specific accessories with any arbitrary connectable interface to any arbitrary device or system.

6. A further claim is made according to claims 1, 2, 3, to construct a PFN for any arbitrary application specific purpose on any configuration with or with out any or all the specified components, attributes qualities, properties or accessories within all the PFN claims and specifications in all the related PFN patent applications on file.

7. A further claim is made according to 1, 2, 3 to incorporate any COTS product that combines or interfaces PFN components as a PFN component and the predicted

consolidation and integration process as detailed in PFN specifications in this application and all related PFN applications

8. A further claim is made according to 1, 2, 3 to use at least one of a locating system or device or both in conjunction with at least one of the detailed communication systems and up to an indefinite number of them connectable to any of the accountable memory storage system to an indefinite number of them solely connectable to one remote location to use of any number of network connections as decribed in the specification of all related PFN applications.

9. A claim is made for personal PFN or tracking device to provide a Trusted Remote Activity Controller and accountability of functions either in a closed intranet or generally on the Internet or as part of the Federal Activity Control Technology FACT as defined and detailed in related PFN filings to incorporate a use through a national registry,

10. All prior claims through out all he PFN applications apply to these personal PFNs and tracking devices

11. A further claim is made for the creation of any standard, code, rule, regulation, or law governing the use, construction, accessories, all implementations, programs and protocols eit her in general or application specific for any such device that performs personal tracking, or PFN functions as discribed to be found precipitous of this technology and thus proprietary in nature and scope to this invention.

12. A claim is made for an arbitrary power pack or energizing system that as application specific for any Personal PFN or tracking device derived from any and all of the related PFN patent applications specifications.

13.According to claim 12 is a solar cell power array charging system either place on a hat or as shoulder pads that regulates it's charge to the power supply by sensing temperature of Batteries of the PFN invention or any mobile and or remote electrical device and battery power pack requiring a wireless charging source.

14. According to claims 12, and 13 an additional claim is made for a human battery created by using two contrasting metals that when surgically implanted in the body creates potenial difference or a current gradient and electron flow in a circuit when connecting the two to provide charging power or energy to perform work.

15. A claim is made according 12, 13, and 14, to use both the body battery and the solar charging to maintenance charge a holding battery in a personal device requiring long battery life.

16. A Claim is made for the use of a location system or device in a personal PFN or personal tracking device for any form of wireless triangulation performed with RF equipment, wireless pagers, telephony,or locating systems like Lorand, Lojack devices or GPS, dead reconing, or gyroscope systems along with any system software and algorithm that either develops it's position data from the transmission signal it self or from another device's data modulated on that signal and employing system software and or device software or firmware to process the signal and recover that data in at least

one remote location and present the recovered data on a TV or TV system or Computer and monitor, lap top, organizer display, palm top display, hand held GPS system , pager device or system cellular phone device analog or digital or Radio frequency device or system

17. A claim is made for any tracking according to claim 1, 2 ,3 and 16 using at least one of a pager, or wireless device serviced by a phone provider responsively attached to a locating device or system that provides location data that is transmitted to commercial TV System provider so that an individual subscriber of cable, Satellite or web TV is provided a tracking service product, through the TV system providers software and individual control box software or firmware identifying the individual subscriber address to run the program through the ESNs or SNs or PFNs submitted in preprogramming for any personal PFN or tracking system, so with these individual means to identify their transmitting assets for their personal viewing and that data will appear transparent and secure in the IP service and TV software till received on the specific home TV through the TV control box, or web box, which will be running end user application level software for a private personal tracking service, which should require PIN or ID protocol through the remote as well as ESN of TV control box ect, along with the appropriate position of lock on or off function control on the remote tracking device or PFN before providing on home TV location data or other telemetry from the remote device. This system should provide minimal cost, with volume and time on the market.

18. A further claim is made according to claims 17, 19 for any personal tracking or telemetry data stream that is conducted though connectable components e.g. land wired TV cable (coaxial , ect.) land line telephone system (ISDN fiber optics, IP routing devices ect) wireless Radio frequency, or Paging technology and protocols or cellular telephony analog or digital Satellite phone or Satellite TV systems (Microwave ect.) and is responsive to one or two way communications or commands to provide personal telemetry and tracking products through TV systems , personal computers, lap tops, palm tops, organizer products, cellular phone system products, hand held pagers, hand held tracking devices, mobile office system products with or without accountability or protective enclosures or a mobile power supply, or a permanent power supply, as well as any or none of the claimed arbitrary attributes of a Primary Focal Node PFN either personal or equipment in type.

19. A separate claim is made for an automated triangulation software package, that is provided distance and directional data with every signal received by a tower so that an algorithm in the receiving software package triangulates at least a two dimensional geographic position of the transmitting device by comparing system data retrieved from all receiving towers , additionally this formulated location data is encoded in what ever transmission protocol is being employed and transmitted with the transmitting devices ESN or identity SN to at least one remote location to be used for the purpose of tracking the transmitting asset and any movement.

ABSTRACT

This invention is a more detailed development of the Primary Focal Node or PFN as it is applied to individual assets and personal use. The personal PFN in this application is still an accountable remote control interface device of wireless communication technologies, processors, activity controls, and local and remote memory storage. In it's simplest configuration it performs accountable tracking of the person wearing the PFN and reports that data back to at least one remote location However in other versions this personal PFN has all the accountable management and control capability (application specific as the equipment PFNs that make up the machine messaging net work. But in this application special consideration is given to size, security, protection, concealment, as well as, common use and functionality. From the first application detailing the Stop and Control box, the PFN invention with in it's nature and scope has always been presented as a organizational electrical interface platform to perform accountable remote and automated functions in a legally acceptable and civilly responsible manner for society and it's institutions.

Basically this innovation is a personally worn or carried device that provides remote tracking, and accessory activity controls. It also creates a redundant record of application specific data locally as well as reports it to at least one remote location. This application will detail four distinct technical pathways to achieve this innovation, and also detail management and control systems that are intranets and or part of the Internet, which in part involves the PFN/TRAC system detailed in earlier related patents. The four technical modalities are governed by the types of communication systems used to make these personal PFN's.

The first is short range radio frequency systems and GPS for local tracking (limited by the horizon) unless they have their signals repeated through any PFN net work system and or public or privately owned digi-peaters (as an emergency repeating

function) to provide emergency long range tracking to these otherwise limited systems. The second modality involves two way paging and GPS and or the latest cellular triangulation locating systems. The third modality involves standard cellular systems either analog or digital with GPS or using these newer locating systems of cellular triangulation . The forth modality involves satellite, radio and wireless phone systems. These are the basic four areas that will be detailed in this application but all of these systems will be designed to have interface capability within the PFN/ TRAC system at some level, either in an individual PFN or through IP gateways (privately set up or publicly and commercially setup or provided by non profit or government agencies or programs.

FIG. 1 RF TRACKINGFOR PERSONAL PFN'S

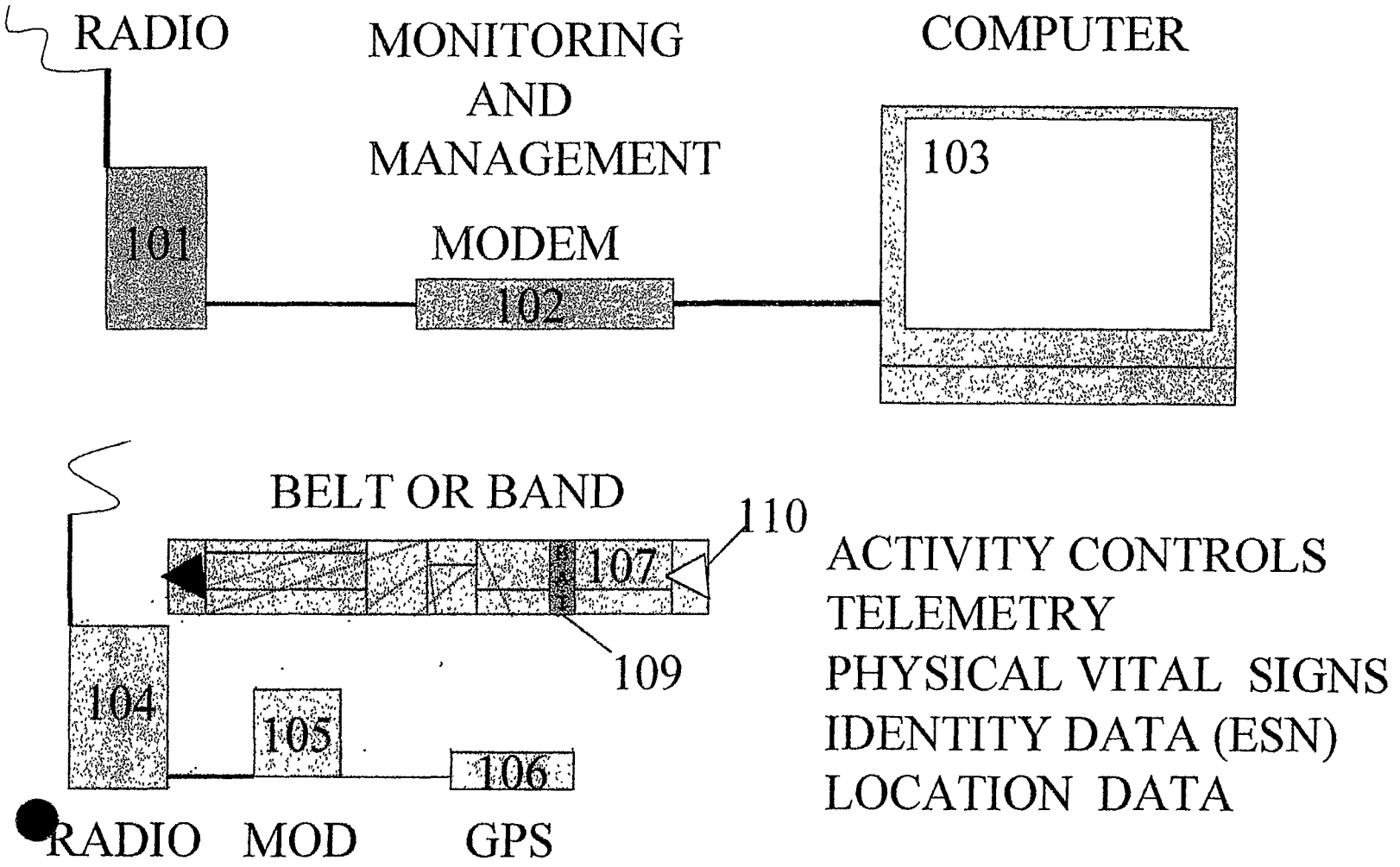

FIG.2 PAGER TRACKING FOR PERSONAL PFN'S

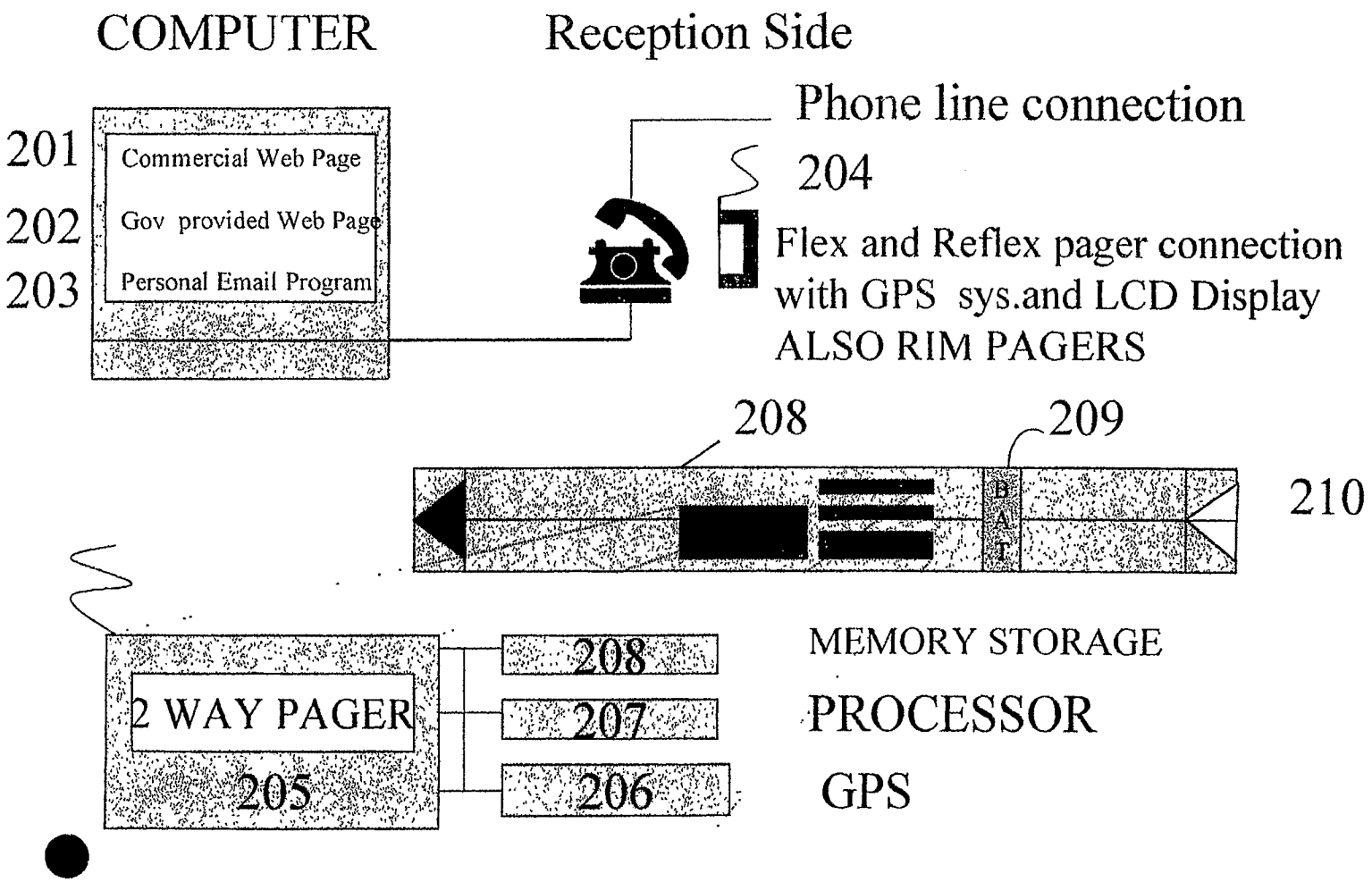

FIG 2A 112756-700

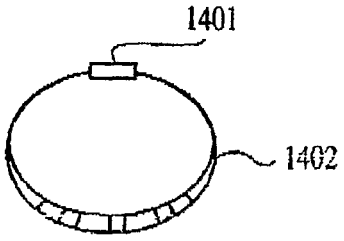

FIG. 13A

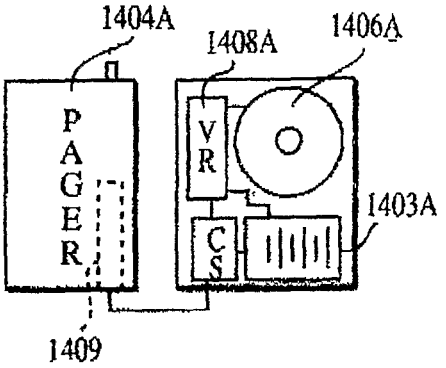

FIG. 13C

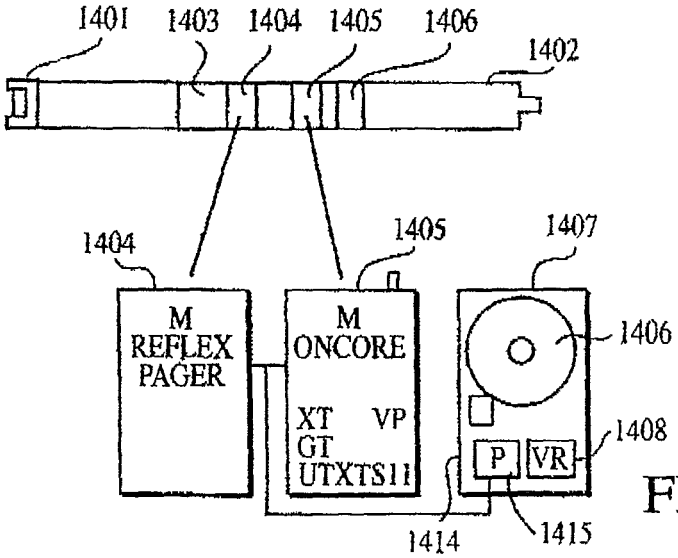

FIG. 13B

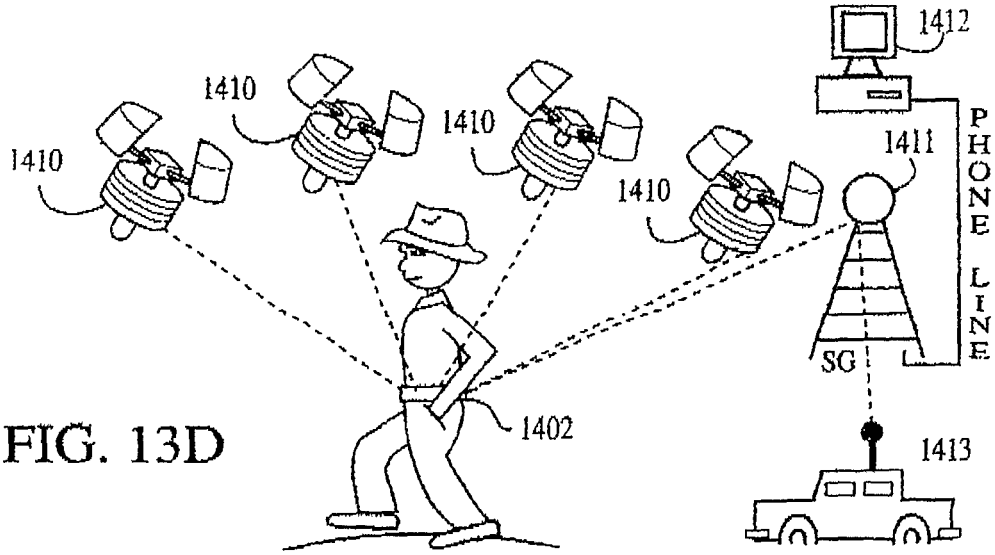

FIG. 13D

FIG. 3

CELLLULAR PHONE TRACKING FOR PERSONAL PFN

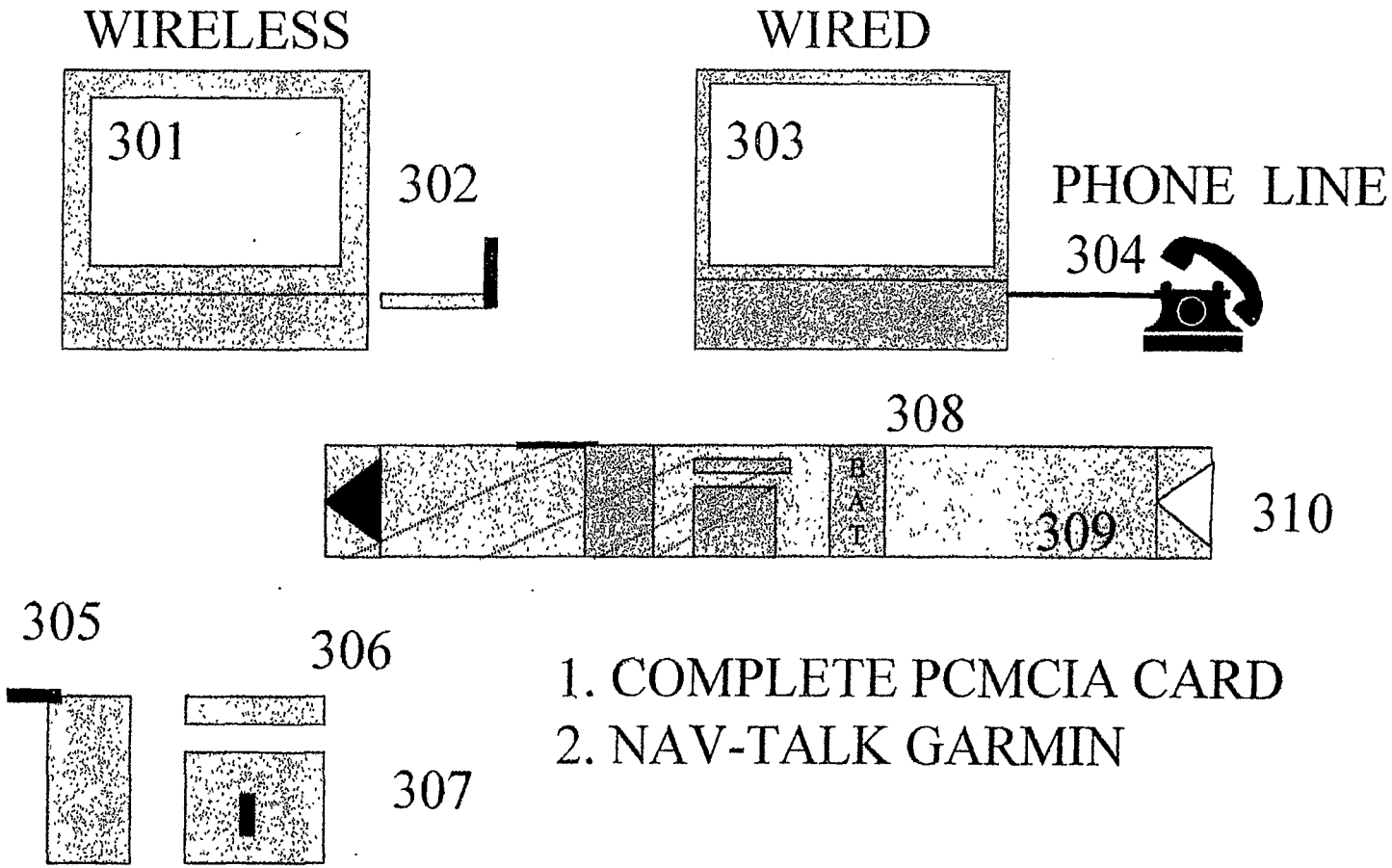

6200892 .050100

117746 700

FIG 4

NEXTEL, RADIO, PAGER, AND PHONE

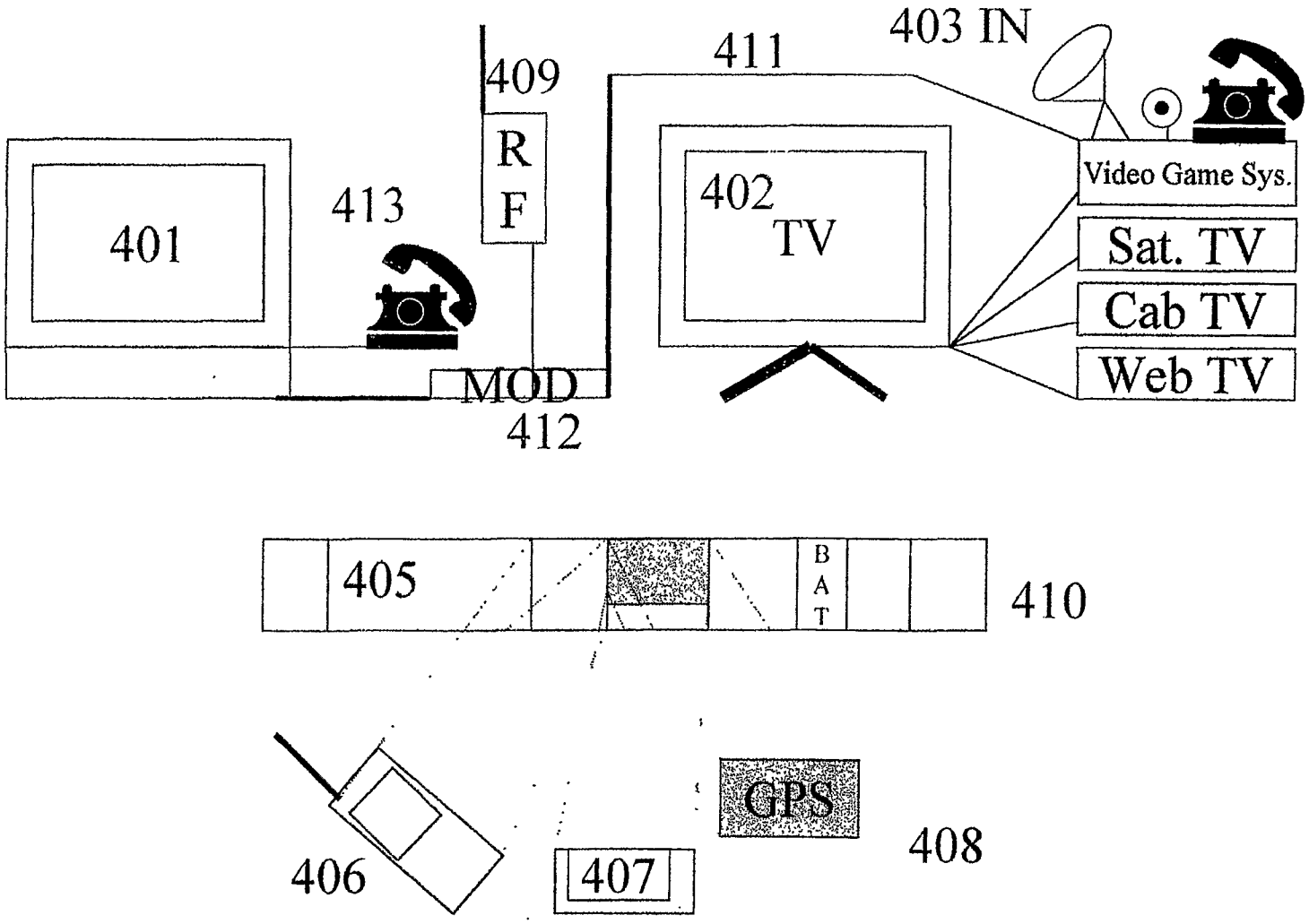

60200872 .050100

117734 - 106

FIG. 5

BELT, CLASP, COLLAR OR BRACELET SECURITY SYSTEM

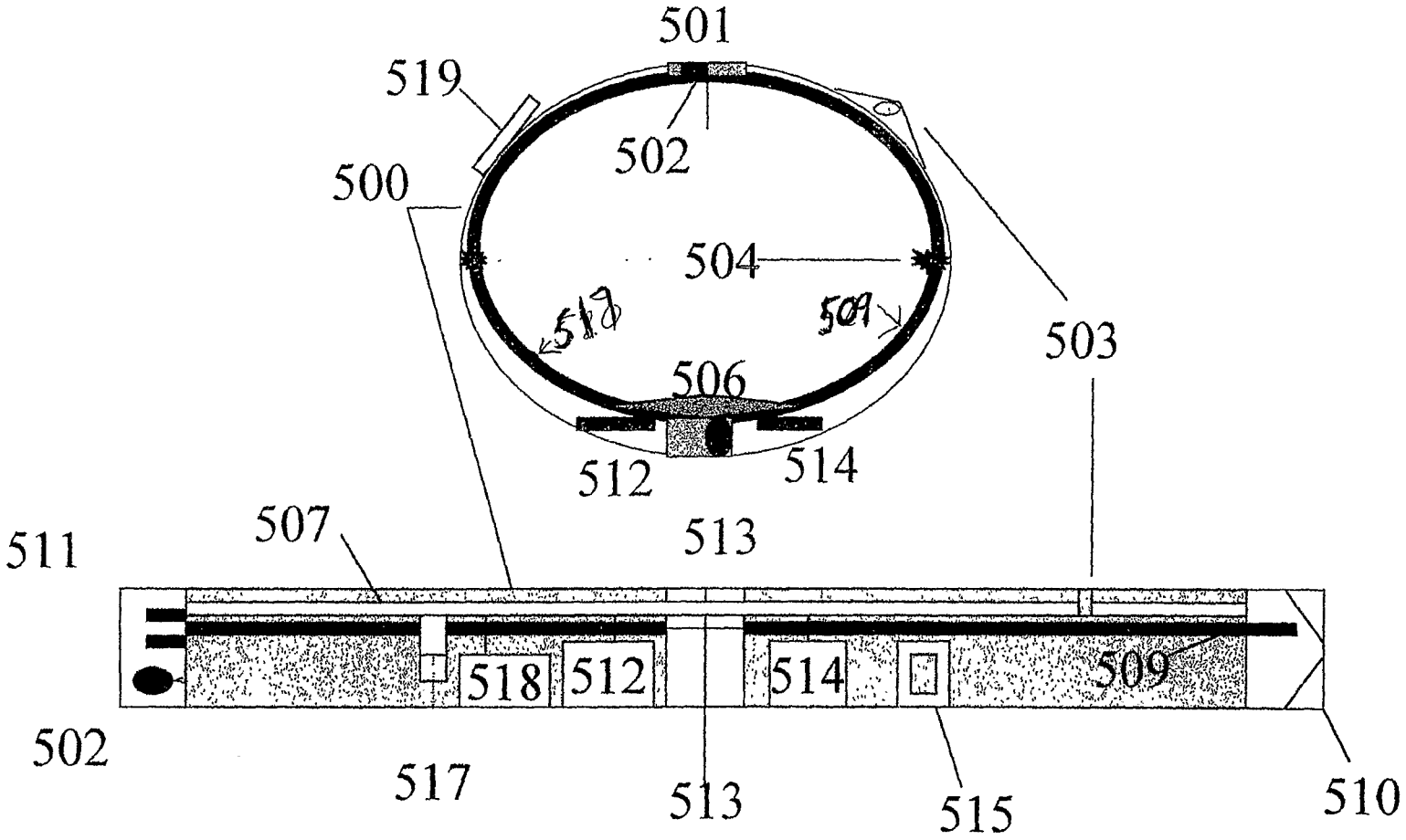

FIG 5A

112756-700

FIG 22

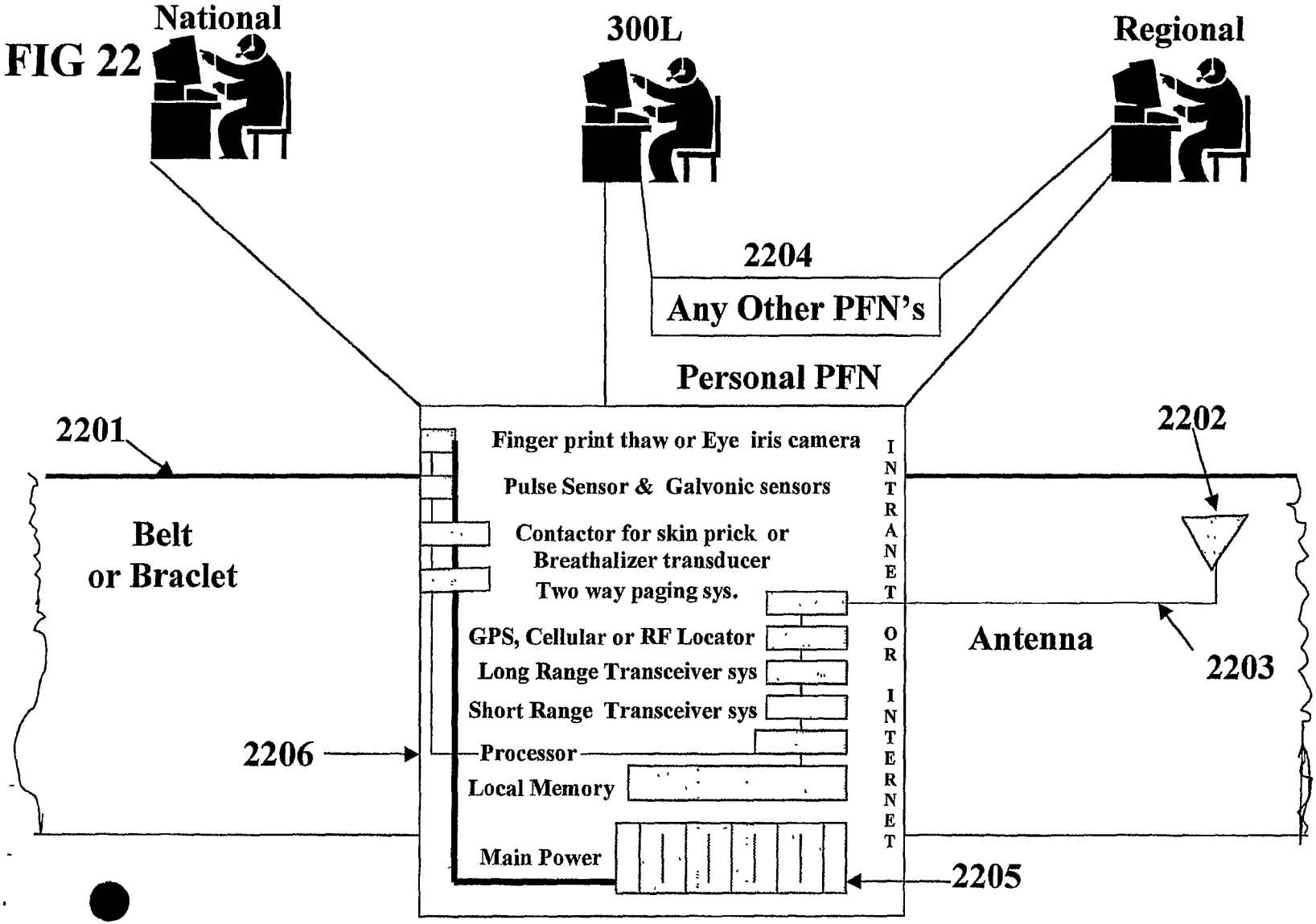

FIG 5B

117,146-760

FIG 18 EARLIER

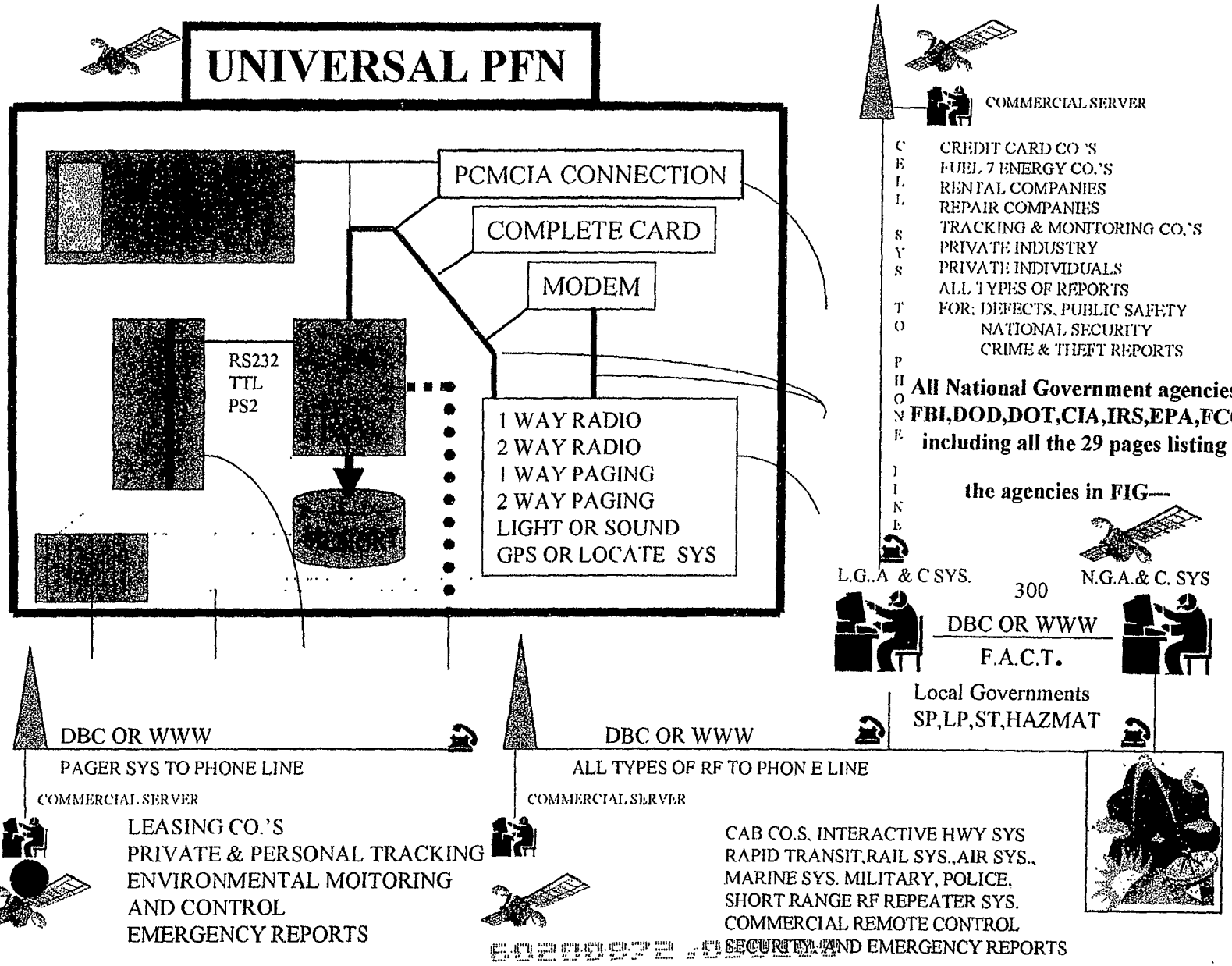

FIG. 6

PRODUCTS & APPLICATIONS

RF REPEATER SYSTEMS
TOT SPOT,
HUNT WELL
PET POINTER,
FRIEND FINDER

WIRELESS PAGER AND TELEPHONY
TRAC A CON . COM/GOV
SKI SEARCHER
SWIM SEAKER
FAMILY FINDER
PATIENT PAL OR HEALTH WATCH
LOST AND FINDER
PEOPLE LOCATOR
PET LOCATOR
PHYSICAL TELEMETRY
IDENTITY CONFIRM ATION

*ALL PRODUCT NAMES STATED HERE
ARE PROPRIETARY TO KLINE AND WALKER LLC
AND COMMERCIAL USE IS GOVERNED BY LICENSING
AUTHORITY

ACTIVITY CONTROLS
AUDIO & VIDEO
P.I.N.- SYSTEMS(IDENTITY)
HEALTH CARE
AUTOMATED MEDICATIONS
BEHAVIOR SUPRESSION SYS.
SEDITIVES
SHOCKING
DECRETES IN ALL CONTROLS

SENSORY TELEMETRY
BLOOD PRESSURE
HEART RATE
CHEMICAL SENSORS
WATER
HEAT
DRUG SENSORS
DESCRETES, EMF,RADIATION
APPLICATION SPECIFIC

ACCOUNABILITY
MEMORY STORAGE
REMOTE MEMORY
LOCAL MEMORY

11275C-700

1ST OF THREE APPENDIX

NUMBERED 1 THROUGH CCC

APPENDIX C

11275C-700

1 OF 6 PAGES RIM PAGER TC GPS PROTOCOL AND SOFTWARE COMMANDS

Communication

Command Sequences:

The IP-950 will communicate with the processor using the "BEL (Hex 0x07)" ASCII character followed by a command/argument byte. No delay is required between the BEL and the actual command sequence. All COM port communications take place at 9600 baud, 8-bit data, No parity, stop-bit=1 (9600, 8, N, 1).

Commands are composed of 2 bytes. First byte is the synchronization byte 07H (BEL) and is followed by a command/argument byte (see table below).

Acknowledges are composed of 2 bytes and share the same structure as the commands (07H + 31H).

Bit#	7	6	5	4	3	2	1	0
	C4	C3	C2	C1	C0	A2	A1	A0

C4-C0: Command bits (5 bits)

A2-A0: Argument bits (3 bits)

C4-[illegible]	A2-A0	(HEX)	(DEC)	Description
00000	111	07	7	Sync byte (BEL) - precedes all commands.
00100	001	21	33	Open COM1 (GPS) port. Acknowledgement is sent.
00100	010	22	34	Open COM2 port. Acknowledgement is sent. (Top Right
00100	011	23	35	Open COM3 port. Acknowledgement is sent. (Bottom
00101	xx0	28	40	Buzzer OFF. No ACK.
00101	xx1	29	41	Buzzer ON. No ACK.
00110	001	31	43	Acknowledgment code. No ACK.
01000	xxx	40	64	Flash off. No ACK.
01001	xRR	49-4B	73-75	Flash ORANGE at "RR" Hz. No ACK.
01010	xRR	51-53	81-83	Flash GREEN at "RR" Hz. No ACK.
01011	xRR	59-5B	89-91	Flash GREEN-ORANGE at "RR" Hz. No ACK.
01100	xRR	61-63	97-99	Flash RED at "RR" Hz. No ACK.
01101	xRR	69-6B	105-107	Flash RED-ORANGE at "RR" Hz. No ACK.
01110	xRR	71-73	113-115	Flash RED-GREEN at "RR" Hz. No ACK.
01111	xRR	79-7B	121-123	Flash RED-GREEN-ORANGE at "RR" Hz. No ACK.

Where:

RR: 00 = Invalid

RR: 01 = 1 Hz

RR: 10 = 2 Hz

RR: 11 = 3 Hz

x: This bit is ignored by the cradle processor.

Examples:

To flash RED-ORANGE at 2 Hz:

07H 6AH

processor will not send an acknowledgement.

To open the COM2 port (Top Right):

07H [redacted] H

will send an acknowledgement:

07H 31H

NOTE 1: Codes not listed in the table are invalid and are ignored by the cradle processor.

NOTE 2: Following a successful DTR/DSR negotiation, processor will send the cradle detection pattern "C@DL" (43H 40H 44H 4CH) mechanism mentioned in the "Cradle Detection" section below.

NOTE 3: If previous condition exists on the LED, then, on receiving the BEL command sequence from the IP-950 for a FLASHING operation, processor will alternate between previous condition of the LED and the new flashing request **every 5 seconds** until a new BEL command sequence arrives or a FLASH OFF command arrives.

Cradle detection:

The Rim Pager IP-950 has an internal connector used for communication as described below:

Pin #

1	2	3	4	5	6	7	14
GND	DTR	TxD	DSR	RxD	RTS	CTS	GND
	(Output from IP-950)		**(Input** to IP-950)				

All other pins are not connected.

detection will be performed using the pins 2 and 4 on the IP-950's serial port and the charging contacts The pin 2 (labeled DTR) is an OUTPUT port for the IP-950 and pin 4 (DSR) is an INPUT port for the IP-950. The IP-950 application will use the ***CommRegisterNotifyPattern*** feature of the RIM engine to detect an event on the serial port. This will function as follows:

1. In order for the *Pattern* mechanism to work, the serial port of the IP-950 MUST BE CLOSED and the processor MUST detect the charging contacts.
2. processor will raise pin 4 HIGH, wait to detect pin 2 on the IP-950 to go HIGH (this is done by the IP-950), then it will send a 4-byte pattern ("**C@DL**") immediately. This is the mechanism described in the RIM "Developer's Guide" in the *CommRegisterNotifyPattern* section – this section is added here for convenience. **NOTE THE BAUD RATE SPECIFIED HERE**.

Pager API functions - Serial communications API functions

Developer's Guide - RIM Inter@ctive Pager 950

CommRegisterNotifyPattern

*void CommRegisterNotifyPattern(void *Pattern)*

Pattern:

This parameter points to a 4 byte string containing

a pattern. The pattern's first byte must be non-zero,

and is always 4 bytes in length.

Remarks:

This function allows multiple applications to register a pattern to look for on the serial port. ***While DTR is active, the port is monitored at 9600 baud 8N1****. If the specified pattern occurs, the application that registered that pattern will be sent a COMM_PATTERN_NOTIFY event.*

Applications may de-register patterns by calling CommRegisterNotifyPattern with a NULL parameter. Applications can only register one pattern at a time. Registering a second pattern will cancel the first.

Examples:

CommRegisterNotifyPattern("abcd")

This will cause a CommRegisterNotifyPattern message to be sent to the calling task when the pattern abcd is seen on the port.

CommRegisterNotifyPattern("a")

This call is not legal, as the Pattern parameter points only to an a followed by zero followed by two unknown characters.

3. As per RIM, once the IP-950 detects a high on pin 4, it pulls pin 2 HIGH within 0.5 seconds and then it waits for about 2 seconds to receive the 4-byte unique pattern. If the IP-950 detects the pattern, then pin 2 is left in the HIGH state, else, it will pull the pin 2 LOW once the 2-second period expires.
4. If the IP-950 successfully decoded the pattern, the application will send the BEL command sequence to "OPEN" the COM 1 port (07H 21H). Once the application receives the response from the cradle processor, it will reset pin 2 on the IP-950 to the LOW state.
5. If the IP-950 is unable to detect the 4-byte pattern, it will pull pin 2 LOW. processor **will detect this LOW signal on pin 2, and it will pull pin 4 on the cradle's port LOW** and restart from step 2. The chart below describes the various scenarios

more specifications Page 5 of 6 AP. 112756-70C.

	IP-950 SERIAL PORT	CHARGING CONTACTS	CRADLE's CONTROL ON PIN-4 OF IP-950	COMMENTS
1.	Connected	Connected	PULL HIGH	Pager is inserted properly into the cradle and the detection process starts and if detected, the cradle processor leaves pin 4 in the HIGH state.
2.	Closed (via s/w)	Connected	STAYS HIGH	Since cradle detects the charging contacts, it will NOT cycle pin 4 from HIGH to LOW.
3.	Connected	No contact	STAYS HIGH	This is the case where the user pulled back the charging contacts but did not pull out the IP-950. In this case, the IP-950 will continue talking to the GPS. processor will show cycling of R/G/ LED – no charging contact condition. ***Also, the GPS connection may be unreliable since the IP-950 is not secured properly.***
4.	Closed (via s/w)	No contact	STAYS HIGH	Application closed the serial port of IP-950 (*not any of the "BEL" commands*) and pulled back the charging contact. processor should show cycling of R/G/ LED – no pager in cradle condition.

NOTE that other peripheral devices (printers, etc.) may use the pin 4 in a different manner. So, it is important to make sure the processor is NOT tied to any specific state of this pin.

The processor will have the mechanism to FLOAT the use of DSR/DTR on COM 2 and 3 while still maintaining RTS/CTS connection on COM 2 by default. JUMPER mechanism on COM 3 to connect RTS/CTS to the IP-950's DSR/DTR. The IP-950 engine does not have any commands to monitor RTS/CTS and hence it will have to use DSR/DTR mechanism to talk to devices on COM ports 2 and 3.

API

GPS

The Trimble GPS has an eight-pin header as follows:

1	2	3	4	5	6	7	8
TXD_B	VCC	TXD_A	V_BACKUP	RXD_A	1PPS	RXD_B	GND

The pager will communicate with the GPS through TXD_A and RXD_A under TSIP/normal RS-232 for TAIP or other protocols. The serial port communications take place at 9600 baud, 8-bit data, No parity, stop-bit=1 (9600, 8, N, 1). The default protocol will be TAIP format.

No Differential GPS operation on the Lassen-SK8 is being proposed.

Optional add-on board for two external communications port and optional buzzer:

An optional COM port 2 will be available for communication between the pager and a serial device (say, a printer). COM port 2 will **ALWAYS** be accessed by the IP-950 via software controls to the ontroller (BEL, followed by the OPEN COM2 (07H 22H) code). The IP-950 will be connected to COM port 2 until the IP-950 application changes the command. *The only exceptions are, (1) when the main power to the cradle is lost, it will default to COM 1, and (2) when there is no GPS card in the cradle, COM port 2 will be open by default.*

There are two configurations possible for the DB-9 connector - DCE requiring a straight one to one cable or DTE that requires a null-modem cable. DTE configuration has been retained.

The table below represents the standard DTE configuration (same as a PC)

1	2	3	4	5	6	7	8	9
N/C	RXD	TXD	DTR	GND	DSR	RTS	CTS	N/C

A COM port 3 will also be available with this option for interface to a Symbol Technology type bar code reader. This port will also be accessed by the pager via software controls only (BEL, followed by the OPEN COM 3 (07H 23H) code).

NOTE: All COM port communications take place at 9600 baud, 8-bit data, No parity, stop-bit=1 (9600, 8, N, 1).

Buzzer: An optional buzzer is also provided in the cradle. The specifications are as follows:

```
Operating Voltage: 3 - 16 Vdc

Max rated current: 7 mA

Min. Sound output: 80 dBA/10cm

Frequency output: 4000 +/- 500 Hz

Tone Nature: Single

Operating temperature: -20 / +60 deg C
```

APPENDIX II

PAGE 1 OF 10

112756-700

AM26LS32AC, AM26LS33AC, AM26LS32AM, AM26LS33AM QUADRUPLE DIFFERENTIAL LINE RECEIVERS

SLLS115B – OCTOBER 1980 – REVISED MAY 1995

- AM26LS32A Meets or Exceeds the Requirements of ANSI EIA/TIA-422-B, EIA/TIA-423-B, and ITU Recommendations V.10 and V.11
- AM26LS32A Has ±7-V Common-Mode Range With ±200-mV Sensitivity
- AM26LS32A Has ±15-V Common-Mode Range With ±500-mV Sensitivity
- Input Hysteresis . . . 50 mV Typical
- Operates From a Single 5-V Supply
- Low-Power Schottky Circuitry
- 3-State Outputs
- Complementary Output Enable Inputs
- Input Impedance . . . 12 kΩ Min
- Designed to Be Interchangeable With Advanced Micro Devices AM26LS32™ and AM26LS33™

AM26LS32AC, AM26LS33AC . . . D OR N PACKAGE
AM26LS32AM, AM26LS33AM . . . J PACKAGE
(TOP VIEW)

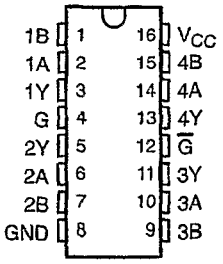

AM26LS32AM, AM26LS33AM . . . FK PACKAGE
(TOP VIEW)

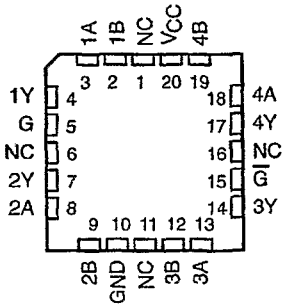

NC – No internal connection

description

The AM26LS32A and AM26LS33A are quadruple differential line receivers for balanced and unbalanced digital data transmission. The enable function is common to all four receivers and offers a choice of active-high or active-low input. The 3-state outputs permit connection direct to a bus-organized system. Fail-safe design ensures that if the inputs are open, the outputs are always high.

Compared to the AM26LS32 and the AM26LS33, the AM26LS32A and AM26LS33A incorporate an additional stage of amplification to improve sensitivity. The input impedance has been increased resulting in less loading of the bus line. The additional stage has increased propagation delay; however, this does not affect interchangeability in most applications.

The AM26LS32AC and AM26LS33AC are characterized for operation from 0°C to 70°C. The AM26LS32AM and AM26LS33AM are characterzed for operation over the full military temperature range of −55°C to 125°C.

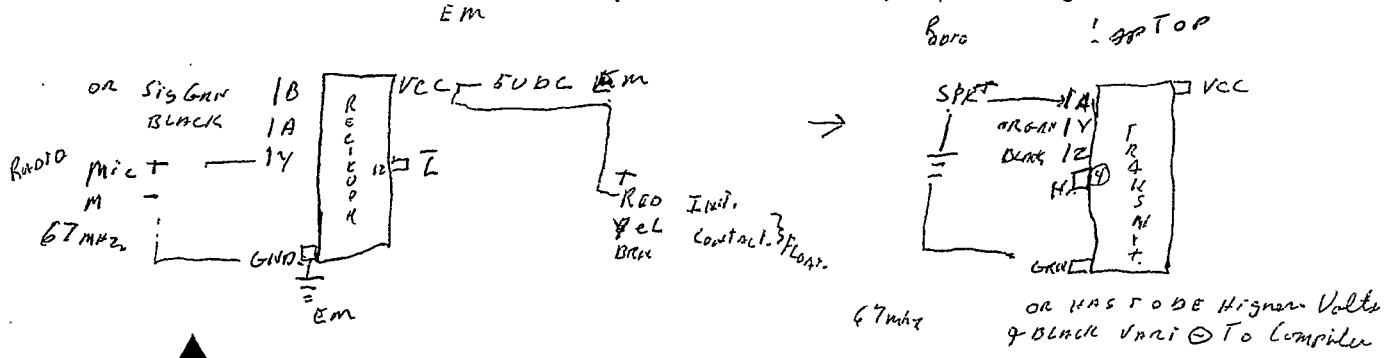

Please be aware that an important notice concerning availability, standard warranty, and use in critical applications of Texas Instruments semiconductor products and disclaimers thereto appears at the end of this data sheet.

AM26LS32 and AM26LS33 are trademarks of Advanced Micro Devices, Inc.

PRODUCTION DATA information is current as of publication date. Products conform to specifications per the terms of Texas Instruments standard warranty. Production processing does not necessarily include testing of all parameters.

Copyright © 1995, Texas Instruments Incorporated

TEXAS INSTRUMENTS
POST OFFICE BOX 655303 • DALLAS, TEXAS 75265

AP ii 2 of 10

FUNCTION TABLE
(each receiver)

DIFFERENTIAL A – B	ENABLES G	ENABLES $\overline{G}$	OUTPUT Y
$V_{ID} \geq V_{IT+}$	H	X	H
	X	L	H
$V_{IT-} \leq V_{ID} \leq V_{IT+}$	H	X	?
	X	L	?
$V_{ID} \leq V_{IT-}$	H	X	L
	X	L	L
X	L	H	Z
Open	H	X	H
	X	L	H

H = high level, L = low level, ? = indeterminate,
X = irrelevant, Z = high impedance (off)

logic symbol†

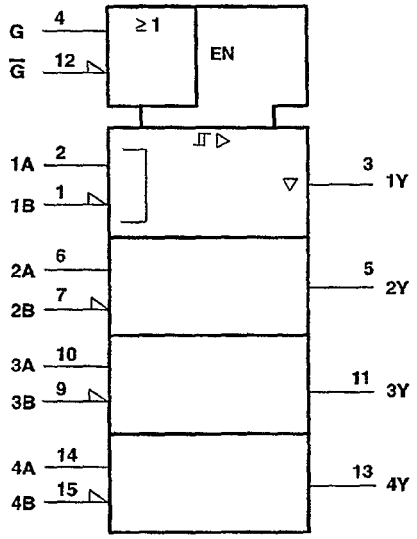

† This symbol is in accordance with ANSI/IEEE Std 91-1984 and IEC Publication 617-12.
Pin numbers shown are for D, J, and N packages.

logic diagram (positive logic)

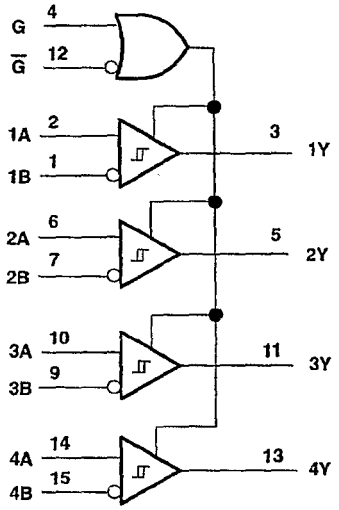

301 86 e-3247

schematics of inputs and outputs

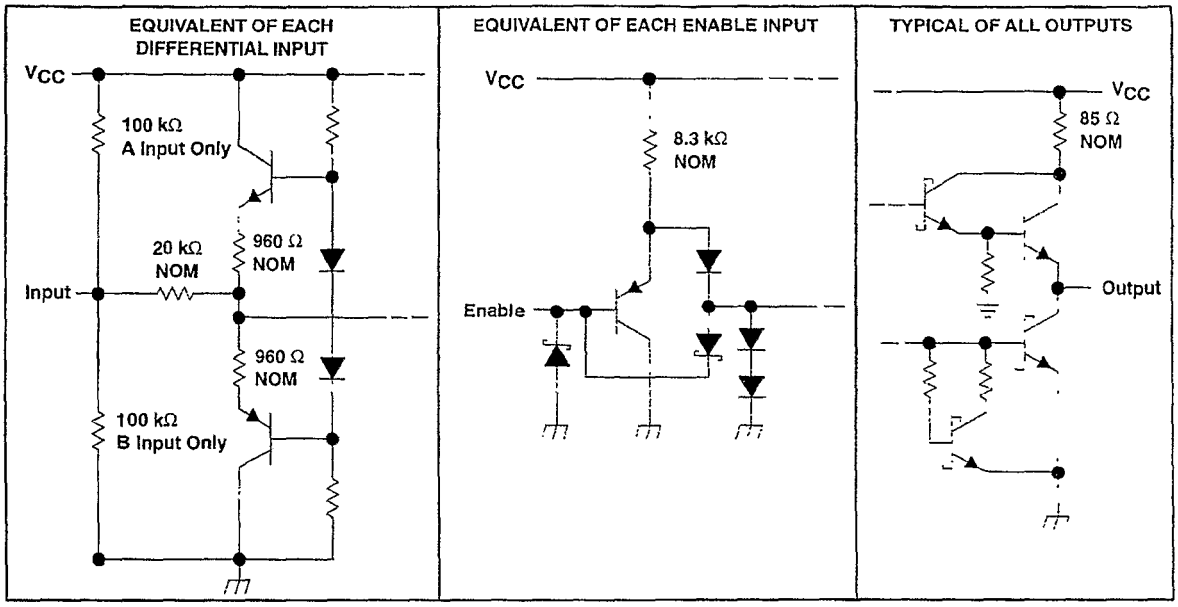

absolute maximum ratings over operating free-air temperature range (unless otherwise noted)†

Supply voltage, V_{CC} (see Note 1) . . . . . 7 V
Input voltage V_I: any differential input . . . . . ±25 V
other inputs . . . . . 7 V
Differential input voltage, V_{ID} (see Note 2) . . . . . ±25 V
Continuous total power dissipation . . . . . See Dissipation Rating Table
Operating free-air temperature range, T_A: AM26LS32AC . . . . . 0°C to 70°C
AM26LS33AC . . . . . 0°C to 70°C
AM26LS32AM . . . . . −40°C to 85°C
AM26LS33AM . . . . . −40°C to 85°C
Storage temperature range, T_{stg} . . . . . −65°C to 150°C
Lead temperature 1,6 mm (1/16 inch) from case for 10 seconds: D or N package . . . . . 260°C
Case temperature for 60 seconds, T_C: FK package . . . . . 260°C
Lead temperature 1,6 mm (1/16 inch) from case for 60 seconds: J package . . . . . 300°C

† Stresses beyond those listed under "absolute maximum ratings" may cause permanent damage to the device. These are stress ratings only, and functional operation of the device at these or any other conditions beyond those indicated under "recommended operating conditions" is not implied. Exposure to absolute-maximum-rated conditions for extended periods may affect device reliability.

NOTES: 1. All voltage values, except differential voltages, are with respect to the network ground terminal.
2. Differential voltage values are at the noninverting (A) input terminals with respect to the inverting (B) input terminals

DISSIPATION RATING TABLE

PACKAGE	$T_A \le 25°C$ POWER RATING	DERATING FACTOR ABOVE $T_A = 25°C$	$T_A = 70°C$ POWER RATING	$T_A = 125°C$ POWER RATING
D	950 mW	7 6 mW/°C	608 mW	—
FK	1375 mW	11 0 mW/°C	880 mW	275 mW
J	1375 mW	11.0 mW/°C	880 mW	275 mW
N	1150 mW	9 2 mW/°C	736 mW	—

AM26LS32AC, AM26LS33AC, AM26LS32AM, AM26LS33AM
QUADRUPLE DIFFERENTIAL LINE RECEIVERS

SLL[redacted]B – OCTOBER 1980 – REVISED MAY 1995

recommended operating conditions

		AM26LS32AC AM26LS33AC			AM26LS32AM AM26LS33AM			UNIT
		MIN	NOM	MAX	MIN	NOM	MAX	
Supply voltage, V_{CC}		4.75	5	5.25	4.5	5	5.5	V
High-level input voltage, V_{IH}		2			2			V
Low-level input voltage, V_{IL}				0.8			0.8	V
Common-mode input voltage, V_{IC}	AM26LS32AC, AM26LS32AM			±7			±7	V
	AM26LS33AC, AM26LS33AM			±15			±15	
High-level output current, I_{OH}				−440			−440	µA
Low-level output current, I_{OL}				8			8	mA
Operating free-air temperature, T_A		0		70	−55		125	°C

electrical characteristics over recommended ranges of V_{CC}, V_{IC}, and operating free-air temperature (unless otherwise noted)

PARAMETER		TEST CONDITIONS			MIN	TYP†	MAX	UNIT
V_{IT+}	Positive-going input threshhold voltage	$V_O = V_{OH}$min,	$I_{OH} = -440$ µA	AM26LS32A			0.2	V
				AM26LS33A			0.5	
V_{IT-}	Negative-going input threshhold voltage	$V_O = 0.45$ V,	$I_{OL} = 8$ mA	AM26LS32A	−0.2‡			V
				AM26LS33A	−0.5‡			
V_{hys}	Hysteresis voltage ($V_{IT+} - V_{IT-}$)					50		mV
V_{IK}	Enable input clamp voltage	V_{CC} = MIN,	$I_I = -18$ mA				−1.5	V
V_{OH}	High-level output voltage	V_{CC} = MIN, $V_{I(G)} = 0.8$ V,	$V_{ID} = 1$ V, $I_{OH} = -440$ µA	'32AC, '33AC	2.7			V
				'32AM, '33AM	2.5			
V_{OL}	Low-level output voltage	V_{CC} = MIN, $V_{I(G)} = 0.8$ V	$V_{ID} = -1$ V,	$I_{OL} = 4$ mA			0.4	V
				$I_{OL} = 8$ mA			0.45	
I_{OZ}	Off-state (high-impedance-state) output current	V_{CC} = MAX		$V_O = 2.4$ V			20	µA
				$V_O = 0.4$ V			−20	
I_I	Line input current	$V_I = 15$ V,	Other input at −10 V to 15 V				1.2	mA
		$V_I = -15$ V,	Other input at −15 V to 10 V				−1.7	
$I_{I(EN)}$	Enable input current	$V_I = 5.5$ V					100	µA
I_{IH}	High-level enable current	$V_I = 2.7$ V					20	µA
I_{IL}	Low-level enable current	$V_I = 0.4$ V					−0.36	mA
r_I	Input resistance	$V_{IC} = -15$ V to 15 V, One input to ac ground			12	15		kΩ
I_{OS}	Short-circuit output current§	V_{CC} = MAX			−15		−85	mA
I_{CC}	Supply current	V_{CC} = MAX,	All outputs disabled			52	70	mA

† All typical values are at $V_{CC} = 5$ V, $T_A = 25°C$, and $V_{IC} = 0$.
‡ The algebraic convention, in which the less positive (more negative) limit is designated as minimum, is used in this data sheet for threshold levels only.
§ Not more than one output should be shorted to ground at a time, and duration of the short circuit should not exceed one second.

switching characteristics, V_{CC} = 5 V, T_A = 25°C

PARAMETER		TEST CONDITIONS	MIN	TYP	MAX	UNIT
t_{PLH}	Propagation delay time, low-to-high-level output	C_L = 15 pF, See Figure 1		20	35	ns
t_{PHL}	Propagation delay time, high-to-low-level output			22	35	ns
t_{PZH}	Output enable time to high level	C_L = 15 pF, See Figure 1		17	22	ns
t_{PZL}	Output enable time to low level			20	25	ns
t_{PHZ}	Output disable time from high level	C_L = 5 pF, See Figure 1		21	30	ns
t_{PLZ}	Output disable time from low level			30	40	ns

PARAMETER MEASUREMENT INFORMATION

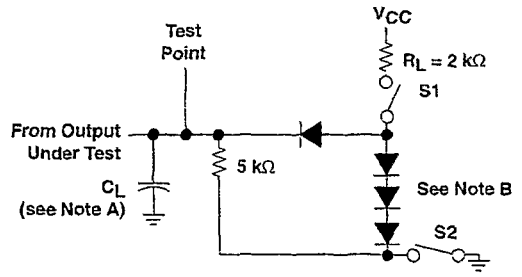

TEST CIRCUIT

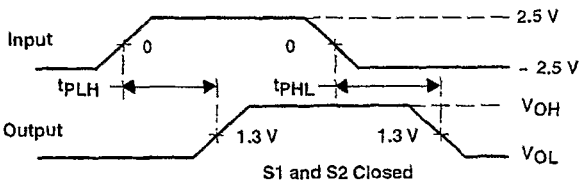

VOLTAGE WAVEFORMS FOR t_{PLH}, t_{PHL}

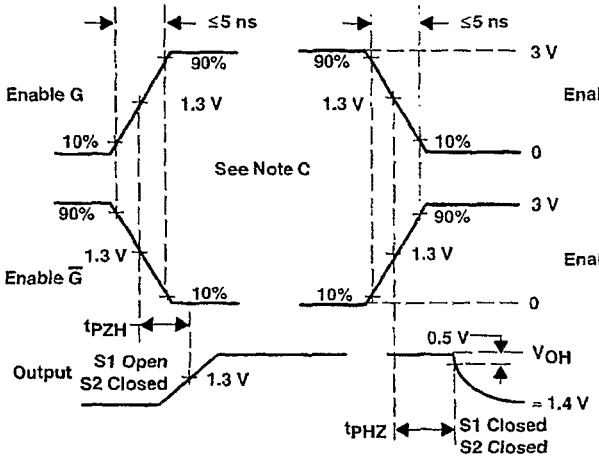

VOLTAGE WAVEFORMS FOR t_{PHZ}, t_{PZH}

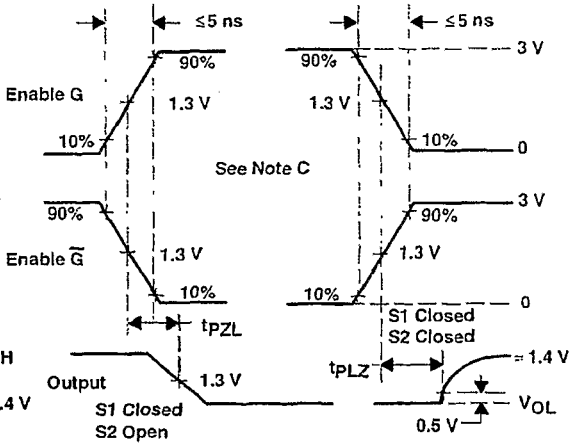

VOLTAGE WAVEFORMS FOR t_{PLZ}, t_{PZL}

NOTES: A. C_L includes probe and jig capacitance
B. All diodes are 1N3064 or equivalent.
C. Enable G is tested with $\overline{G}$ high; $\overline{G}$ is tested with G low

Figure 1

SLLS[redacted] – OCTOBER 1980 – REVISED MAY 1995

TYPICAL CHARACTERISTICS

HIGH-LEVEL OUTPUT VOLTAGE
vs
HIGH-LEVEL OUTPUT CURRENT†

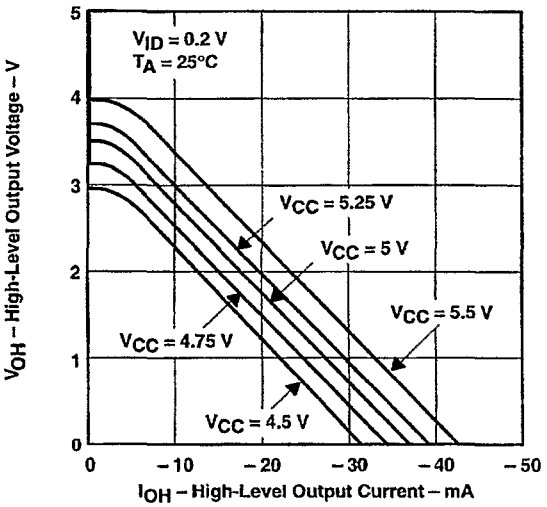

† V_{CC} = 5.5 V and V_{CC} = 4.5 V applies to M-suffix devices only.

Figure 2

HIGH-LEVEL OUTPUT VOLTAGE
vs
FREE-AIR TEMPERATURE

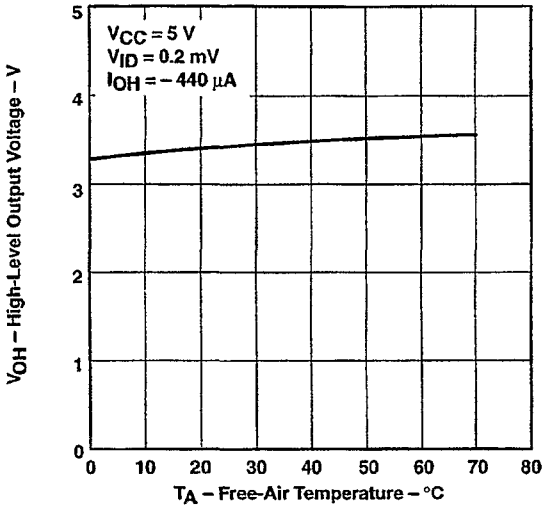

Figure 3

LOW-LEVEL OUTPUT VOLTAGE
vs
LOW-LEVEL OUTPUT CURRENT

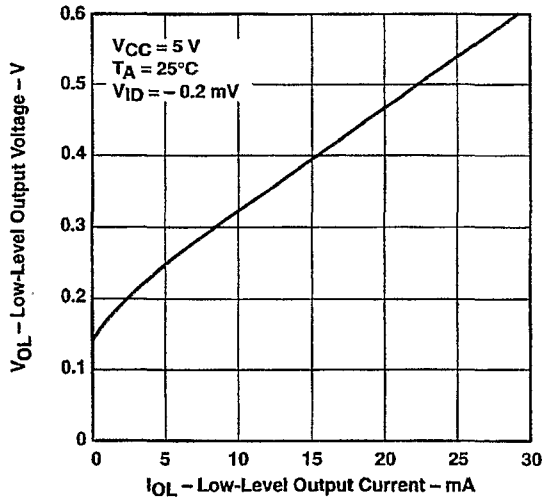

Figure 4

LOW-LEVEL OUTPUT VOLTAGE
vs
FREE-AIR TEMPERATURE

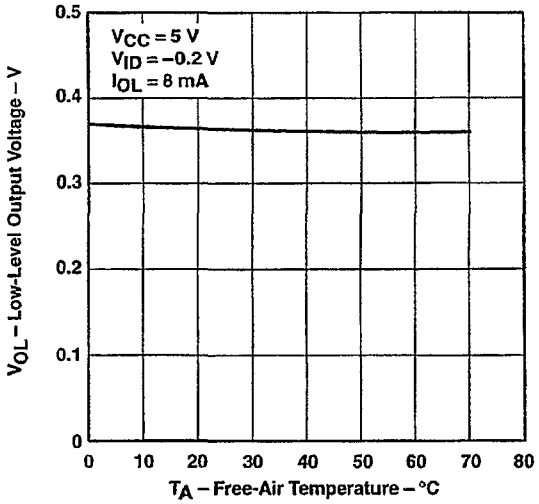

Figure 5

TYPICAL CHARACTERISTICS

OUTPUT VOLTAGE
vs
ENABLE G VOLTAGE

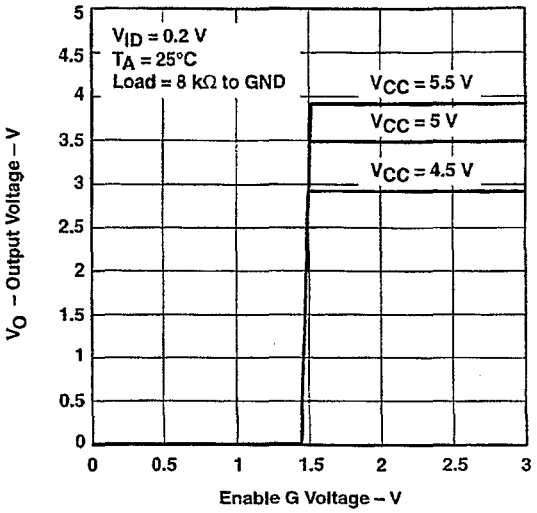

Figure 6

OUTPUT VOLTAGE
vs
ENABLE G VOLTAGE

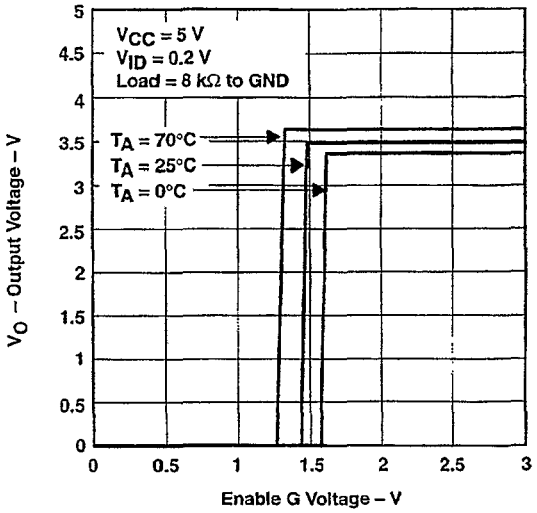

Figure 7

OUTPUT VOLTAGE
vs
ENABLE G VOLTAGE

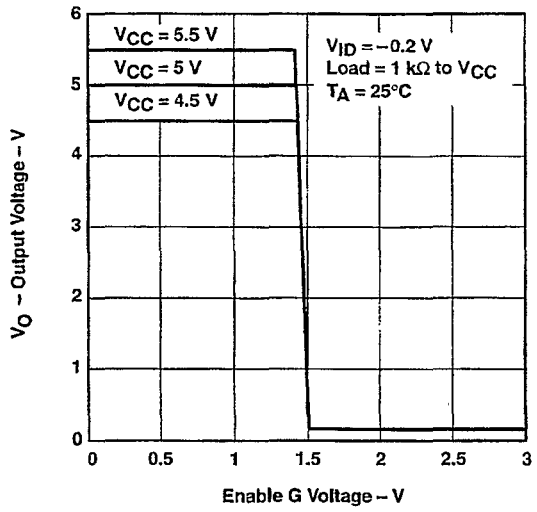

Figure 8

OUTPUT VOLTAGE
vs
ENABLE G VOLTAGE

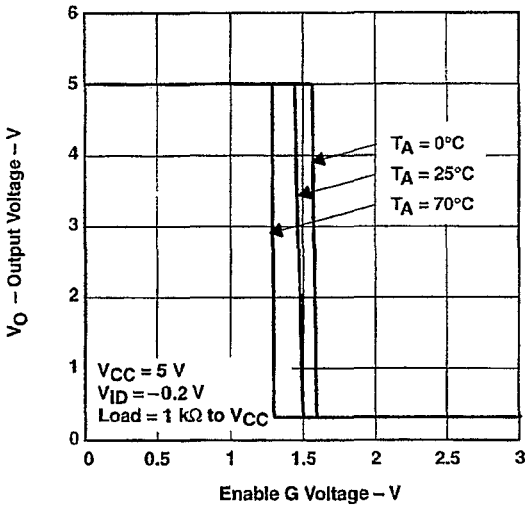

Figure 9

TYPICAL CHARACTERISTICS

AM26LS32A
OUTPUT VOLTAGE
vs
DIFFERENTIAL INPUT VOLTAGE

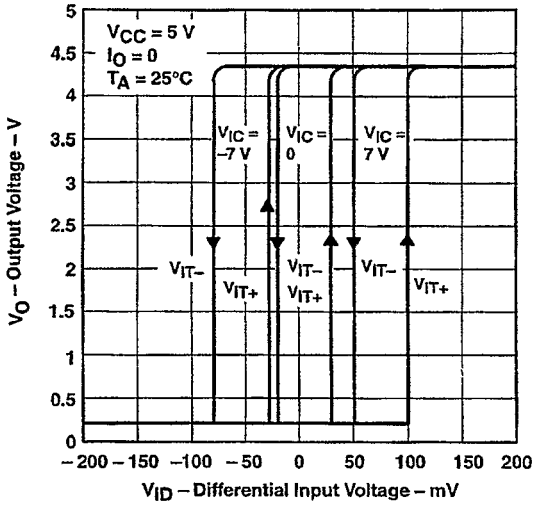

Figure 10

AM26LS33A
OUTPUT VOLTAGE
vs
DIFFERENTIAL INPUT VOLTAGE

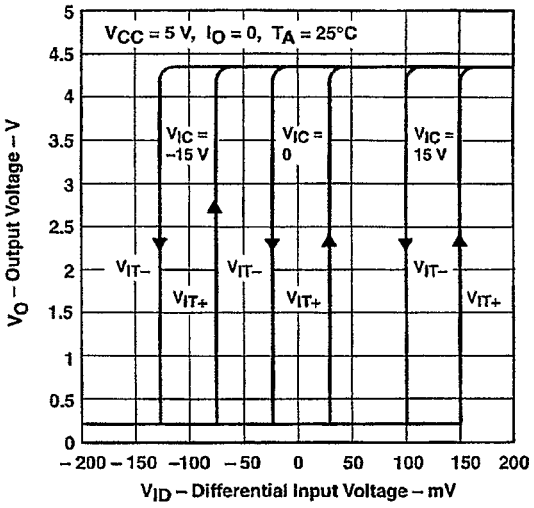

Figure 11

INPUT CURRENT
vs
INPUT VOLTAGE

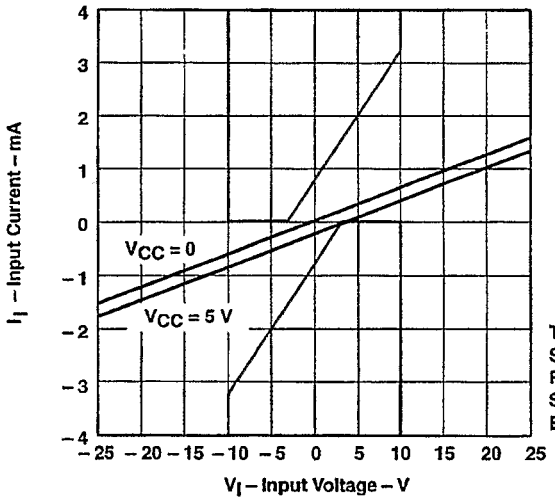

The Unshaded Area Shows Requirements of Paragraph 4.2.1 of ANSI Standards EIA/TIA-422-B and EIA/TIA-423-B

Figure 12

APPLICATION INFORMATION

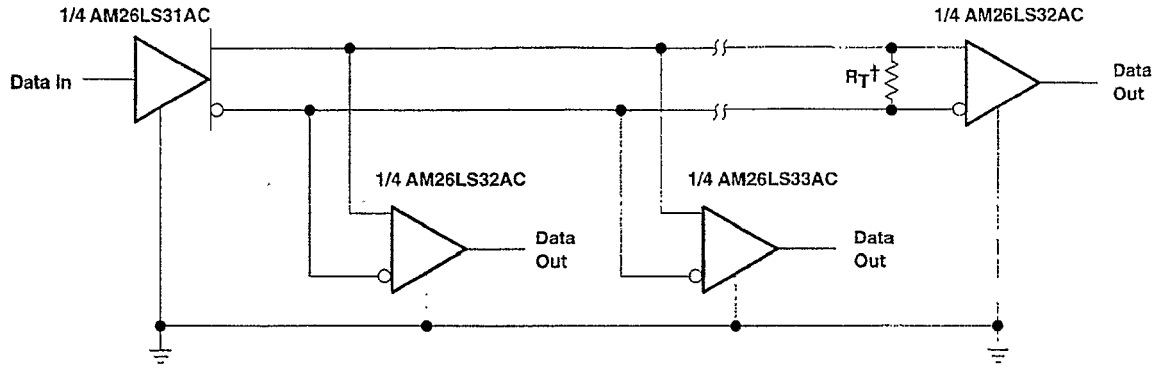

† R_T equals the characteristic impedance of the line.

Figure 13. Circuit With Multiple Receivers

IMPORTANT NOTICE

Texas Instruments and its subsidiaries (TI) reserve the right to make changes to their products or to discontinue any product or service without notice, and advise customers to obtain the latest version of relevant information to verify, before placing orders, that information being relied on is current and complete. All products are sold subject to the terms and conditions of sale supplied at the time of order acknowledgement, including those pertaining to warranty, patent infringement, and limitation of liability.

TI warrants performance of its semiconductor products to the specifications applicable at the time of sale in accordance with TI's standard warranty. Testing and other quality control techniques are utilized to the extent TI deems necessary to support this warranty. Specific testing of all parameters of each device is not necessarily performed, except those mandated by government requirements.

CERTAIN APPLICATIONS USING SEMICONDUCTOR PRODUCTS MAY INVOLVE POTENTIAL RISKS OF DEATH, PERSONAL INJURY, OR SEVERE PROPERTY OR ENVIRONMENTAL DAMAGE ("CRITICAL APPLICATIONS"). TI SEMICONDUCTOR PRODUCTS ARE NOT DESIGNED, AUTHORIZED, OR WARRANTED TO BE SUITABLE FOR USE IN LIFE-SUPPORT DEVICES OR SYSTEMS OR OTHER CRITICAL APPLICATIONS. INCLUSION OF TI PRODUCTS IN SUCH APPLICATIONS IS UNDERSTOOD TO BE FULLY AT THE CUSTOMER'S RISK.

In order to minimize risks associated with the customer's applications, adequate design and operating safeguards must be provided by the customer to minimize inherent or procedural hazards.

TI assumes no liability for applications assistance or customer product design. TI does not warrant or represent that any license, either express or implied, is granted under any patent right, copyright, mask work right, or other intellectual property right of TI covering or relating to any combination, machine, or process in which such semiconductor products or services might be or are used. TI's publication of information regarding any third party's products or services does not constitute TI's approval, warranty or endorsement thereof.

Copyright © 1998, Texas Instruments Incorporated

CH1786 Family of Ultra Small 2400 bps Modems

INTRODUCTION

The CH1786 family of modems offer the smallest footprint commercially available for a full function, FCC Part 68 approved 2400bps modem. These modems provide a fast, easy and flexible way to integrate a modem into any OEM product while utilizing the minimum amount of PCB space (1.0 "x 1.25 "x 0.53 "). The CH1786 family only requires two external interfaces: a CCITT V.24 serial interface that can be routed directly to a UART, and a Tip and Ring interface which goes directly to an RJ-11 jack for the PSTN line connection. The CH1786 can be controlled with industry standard AT commands and, hence, is compatible with available industry communication software.

All CH1786 modems support asynchronous operation at 2400bps, 1200bps, and 300bps to both Bell and CCITT standards. The resident PSTN line interface, or Data Access Arrangement (DAA), while being FCC approved, is also Canadian DOT approveable and can be approved in other countries that require 1500VAC RMS isolation requirements per UL 1950.

The CH1786 family of modems operate off a single 5-volt supply. The low power operation and automatic standby mode make these modems ideally suited for portable equipment. In addition, their small physical size affords maximum flexibility in equipment design.

FEATURES

- Supports Standards CCITT V.22bis,V.22,Bell 212,and Bell 103
- FCC Part 68 approved and DOT CSA CS-03 Part I approveable
- UL 1950 and CSA C22.2 950 Listed
- AT Command structure with extensions
- 1500 VAC RMS isolation barrier minimum, 2122V peak surge protection minimum
- Single 5 volt operation
- Low power operation with automatic reduced power standby mode
- Automatic adaptive and fixed compromise equalization
- Test modes and diagnostics
- Size:1.0 "x 1.25 "x 0.53 "(nominal)
- NVRAM allows storage of custom configurations and telephone numbers

CH1786 Family Includes:

CH1786LC	2400bps Modem, voice/ Inject, Hermetic Operating Temperature: 0°C to +70°C
CH1786NH	2400bps Modem, No Voice/Inject, Non-hermetic Operating Temperature: 0°C to +70°C
CH1786	2400bps Modem, NVRAM, Voice/ Inject, Operating Temperature: 0°C to +70°C
CH1786ET	2400bps Modem, NVRAM, Voice/ Inject, Hermetic, Operating Temperature: –40°C to +85°C
CH1786FX	Same as CH1786 with send and receive fax capability

The CH1786 comes with FCC Part 68 approval and is shipped from the factory with an FCC Part 68 label indicating the registration number and ringer equivalent. This label should be prominently displayed on the end product.

Figure 1. Functional Block Diagram of CH1786.

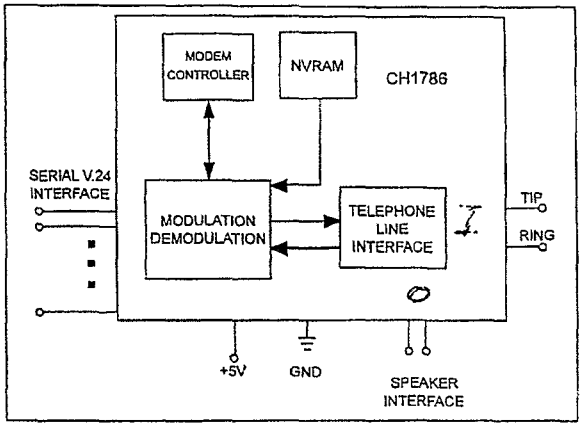

DESCRIPTION OF FUNCTIONAL BLOCKS AND DISCUSSION OF BASIC OPERATIONS

Figure 1 contains a functional block drawing of the CH1786 The CH1786 is a highly integrated, full-function modem, comprised of a modulator/ demodulator, controller, NVRAM (Non-Volatile RAM) and an FCC Part 68 approved PSTN line interface DAA (Data Access Arrangement)

Modulation/Demodulation and Modem Controller.

These functions are provided by a monolithic modem integrated circuit. This IC has built-in facilities to accommodate integrated AT command control and contains the necessary resident interfaces for general communication and routing to the DAA.

Telephone Line Interface or DAA.

The CH1786 family of modems is designed to meet 1500VAC RMS isolation and provide 2122V peak surge protection Consequently, the CH1786 satisfies U.S. FCC Part 68 and DOT CSA CS-03 Part I Canadian requirements, and will meet other international approval agency requirements that specify these levels of isolation

Figure 2. Voice/ Data Port Control

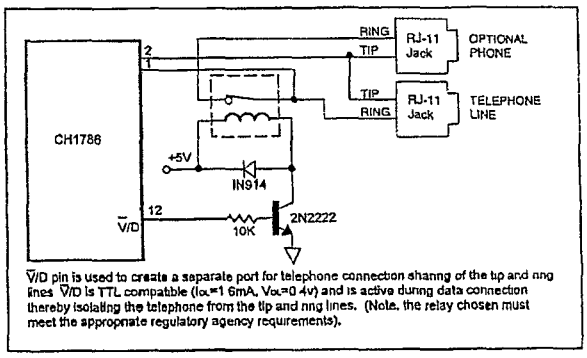

V/D pin is used to create a separate port for telephone connection sharing of the tip and ring lines. V/D is TTL compatible (I_{OL}=1 6mA, V_{OL}=0.4v) and is active during data connection thereby isolating the telephone from the tip and ring lines. (Note, the relay chosen must meet the appropriate regulatory agency requirements).

©2000 Cermetek Microelectronics, Inc.

Zero Power Mode (CH1786ET only).

If an application calls for zero power during standby periods, the power may be switched off using external circuitry and the reapplied when the CH1786 's RI pin becomes active. The CH1786ET products can thus be powered down to zero.

Figure 3. Zero Power Operation

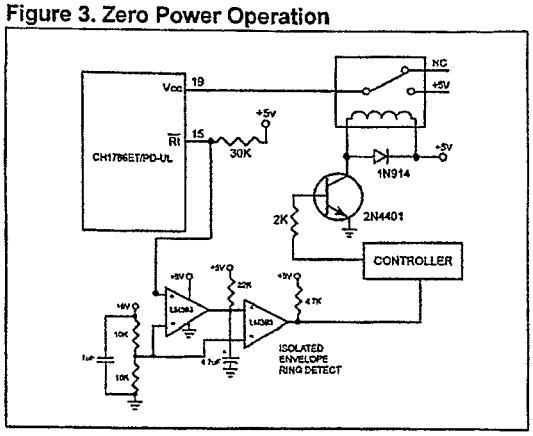

Referring to Figure 3, the controller activates the relay switch, supplying power (+5V to the CH1786ET-UL. In this configuration, the ring signal is used to "wake up "the CH1786ET-UL when the CH1786ET-UL is in the power down state

The pins of the CH1786ET-UL will be in an undefined state when power is switched off. This must be taken into consideration to assure that no unwanted signals are presented to the CH1786ET-UL during power down.

Ring Indicator (RI).

The RI pin follows the frequency of the ring signal and toggles low when the CH1786 detects an incoming call. The ring signal is typically 20 to 30 Hz and is on for 2 seconds and off for 4 seconds. Although not TTL compliant, the RI pin can, nonetheless, be utilized to activate external circuitry including the external RST pin.

When using the RI pin, it is recommended that a Schmitt Trigger or the Isolated Envelope Detect Circuit in Figures 3 or 5 be placed between the RI pin and the external load

Power Supply.

The CH1786 modem module is a complex set of sub-systems. During the course of normal operation the CH1786 decodes analog signals from the telephone line that are in the millivolt range. Steps must be taken by the user to guarantee that power supply noise on all supply lines, including ground, does not exceed 50 mV peak to peak. Any frequency between 20 kHz and 150 kHz must be less than 500 micro volts peak. If necessary, use dedicated power and ground planes. Failure to provide such operating conditions could cause the CH1786 to malfunction or to function erratically

The CH1786 requires a single +5V ±5%supply. It is recommended that by-pass capacitors be placed on the power supply as close to the modem's supply input as practical. It's recommended a 10 µF Tantalum capacitor in parallel with a 0.01 µF ceramic capacitor be used.

Voice/ Tone Injection Port.

The CH1786 provides two pins to allow the user to share the telephone line interface associated with the modem for voice and DTMF applications. Figure 4 contains a schematic indicating one possible configuration for voice/ tone utilization.

WARNING: The CH1786 has been FCC Part 68 approved as a data modem only. Utilization of the Voice/Tone Port requires further registration. FCC will require that the system , including the CH1786 and the handset or DTMF transceiver, adhere to Part 68 rules. Voice/Tone Injection is not active on CH1786NH.

Figure 4. Voice/ Tone Injection

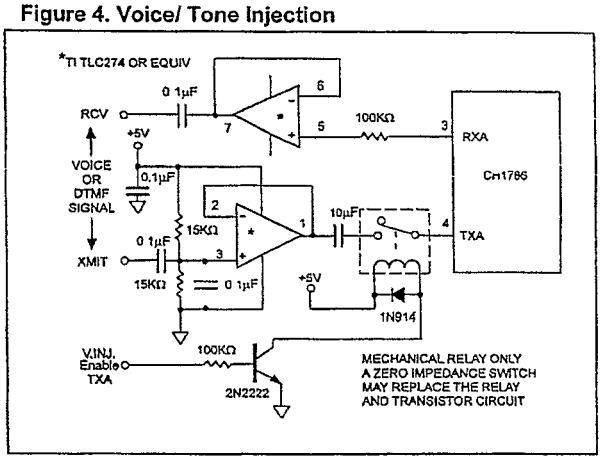

Typically, voice communication would precede data communications For this case, the following commands should be used to configure the CH1786 (Refer to Figure 4):

Enter: ATS0=[CR]	Disables auto-answer
Enter: ATS7=255[CR]	Eliminates hang-up due to
Enter: ATS10=255[CR]	lack of carrier signal.

The following command sequences illustrate implementation of common Voice/Tone Port applications.

1. To answer a voice call:
   (a) Enter: ATH1[CR]
   (b) Drive V.INJ. HIGH to activate relay.
   (c) Begin voice conversation.

2. To switch to data mode, drive V.INJ. LOW, then·
   (a) At the originate modem:
   Enter: ATX1[CR]

3. To disconnect (hang-up) a voice call or a data call·
   Enter: ATH[CR]

4. To place a call using the CH1786's DTMF.
   (a) Enter ATDT#;C0[CR]
   (b) Drive V.INJ high

©2000 Cermetek Microelectronics, Inc.

Table 2. CH1786 Pin Descriptions (Continued)

5	SPK	O	SPEAKER. Audio output for speaker. See speaker control schematic in Figure 6.
	NC	-	No connection.
7	NC	-	No connection
8	$\overline{\text{SLEEP}}$	O	SLEEP output. A LOW indicates CH1786 is in low power idle mode Used to control power to other devices See Figure 6. Register S24 is the sleep timer register. When the CH1786 is inactive for a period of time specified by S24, the CH1786 will power down by about 50% of its normal operating power. During power down, all I/O lines become undefined The CH1786 products are shipped from the factory with a 5 second inactivity timer (ATS24=5) enabled
9	NC	-	No connection.
10	TXD	I	TRANSMIT DATA. Serial Transmit data input. Marking or a binary 1 condition is transmitted when a HIGH is asserted.
11	RXD	O	RECEIVE DATA. Serial Receive data output. Received marking or binary 1 condition is indicated by HIGH
12	$\overline{\text{V/D}}$	O	Voice/Data output is used to switch between telephone and modem line use. In a typical application, V/D active HIGH opens the normally closed voice injection relay and disconnects the handset from the telephone line. See Figure 2
13	$\overline{\text{DTR}}$	I	DATA TERMINAL READY input Active LOW. Switching off DTR can either return modem to command state, disconnect phone call, or reset modem DET should be set LOW when not used.
14	$\overline{\text{DSR}}$	O	DATA SET READY output. LOW indicates handshaking with a remote modem is in progress, and/ or the data carrier of a remote modem has been detected.
15	$\overline{\text{RI}}$	O	RING INDICATION. This signal follows the frequency of the ringing signal and is normally about 20 to 40 Hz for 2 seconds on with 4 seconds off
16	$\overline{\text{CTS}}$	O	CLEAR-TO SEND. Output always LOW. Reserved for flow control when using FAX option Currently, CTS only active on CH1786FX when S24=255. No power down mode option available. Effective 31 May 2000, CTS will be active on CH1786 also.
17	$\overline{\text{DCD}}$	O	DATA CARRIER DETECT. LOW indicates a data carrier from a remote modem is detected.
18	$\overline{\text{HS}}$	O	SPEED INDICATION. HIGH speed select output. A low on this pin indicates the modem is operating at 2400bps.
19	VCC	-	POWER SUPPLY. 5 volts ± 5% Note: Noise should be less than 50mV peak to peak
20	GND	-	GROUND. Note: Noise should be less than 50mV peak to peak.
21	RST[1]	I	RESET input. Active HIGH. This input must be asserted HIGH for at least 10 ms to reset the modem. RESET is then returned LOW for normal operation. If no system reset is available, let this pin float to enable internal reset.
22	NC	-	No connection.

Note: (1) If VCC has a slow power up ramp time, the internal reset may be ineffective.

jc715 U.S. PTO
05/01/00

Please type a plus sign (+) inside this box → +

PTO/SB/16 (2-98)
Approved for use through 01/31/2001. OMB 0651-0037
Patent and Trademark Office; U.S. DEPARTMENT OF COMMERCE

Under the Paperwork Reduction Act of 1995, no persons are required to respond to a collection of information unless it displays a valid OMB control number.

PROVISIONAL APPLICATION FOR PATENT COVER SHEET

This is a request for filing a PROVISIONAL APPLICATION FOR PATENT under 37 CFR 1.53 (c).

JC541 U.S. PTO
60/200872
05/01/00

INVENTOR(S)		
Given Name (first and middle [if any])	Family Name or Surname	Residence (City and either State or Foreign Country)
Richard C.	Walker	Potomac, MD

☐ *Additional inventors are being named on the ___ separately numbered sheets attached hereto*

TITLE OF THE INVENTION (280 characters max)

PERSONAL PFN SYSTEMS FOR ACCOUNTABLE TRACKING REMOTE MANAGEMENT AND AGGRESIVE CONTROL SCENARIOS

CORRESPONDENCE ADDRESS

Direct all correspondence to:

☐ Customer Number → *Type Customer Number here*

OR

Place Customer Number Bar Code Label here

☐ Firm or Individual Name	Henry N. Wixon, Esq.				
Address	C/O HALE AND DORR LLP				
Address	1455 PENNSYLVANIA AVENUE, NW, #1000				
City	WASHINGTON	State	DC	ZIP	20004
Country	USA	Telephone	202-942-8400	Fax	202-942-8484

ENCLOSED APPLICATION PARTS *(check all that apply)*

X	Specification *Number of Pages* 105	X	Small Entity Statement
X	Drawing(s) *Number of Sheets* 9	☐	Other (specify)

METHOD OF PAYMENT OF FILING FEES FOR THIS PROVISIONAL APPLICATION FOR PATENT *(check one)*

☐ A check or money order is enclosed to cover the filing fees

X The Commissioner is hereby authorized to charge filing fees or credit any overpayment to Deposit Account Number: 08-0219

FILING FEE AMOUNT ($): $75.00

The invention was made by an agency of the United States Government or under a contract with an agency of the United States Government.

☒ No.

☐ Yes, the name of the U.S. Government agency and the Government contract number are: _____

Respectfully submitted,

SIGNATURE _____

TYPED or PRINTED NAME Henry N. Wixon, Esq.

TELEPHONE _____

Date 5/1/00

REGISTRATION NO. *(if appropriate)* 32,073

Docket Number: 112756-700

USE ONLY FOR FILING A PROVISIONAL APPLICATION FOR PATENT

This collection of information is required by 37 CFR 1.51. The information is used by the public to file (and by the PTO to process) a provisional application. Confidentiality is governed by 35 U.S.C. 122 and 37 CFR 1.14. This collection is estimated to take 8 hours to complete, including gathering, preparing, and submitting the complete provisional application to the PTO. Time will vary depending upon the individual case. Any comments on the amount of time you require to complete this form and/or suggestions for reducing this burden, should be sent to the Chief Information Officer, U.S. Patent and Trademark Office, U.S. Department of Commerce, Washington, D.C., 20231. DO NOT SEND FEES OR COMPLETED FORMS TO THIS ADDRESS. SEND TO: Box Provisional Application, Assistant Commissioner for Patents, Washington, D.C., 20231.

PTO/SB/09 (12-97)
Approved for use through 9/30/00. OMB 0651-0031
Patent and Trademark Office; U.S. DEPARTMENT OF COMMERCE
Under the Paperwork Reduction Act of 1995, no persons are required to respond to a collection of information unless it displays a valid OMB control number.

STATEMENT CLAIMING SMALL ENTITY STATUS (37 CFR 1.9(f) & 1.27(b))--INDEPENDENT INVENTOR	Docket Number (Optional) 112756-700

Applicant, Patentee, or Identifier: RICHARD WALKER

Application or Patent No.: To be assigned

Filed or Issued: Herewith

Title: PERSONAL PFN SYSTEMS FOR ACCOUNTABLE TRACKING REMOTE MANAGEMENT AND AGGRESIVE CONTROL SCENARIOS

As a below named inventor, I hereby state that I qualify as an independent inventor as defined in 37 CFR 1.9(c) for purposes of paying reduced fees to the Patent and Trademark Office described in:

- [xx] the specification filed herewith with title as listed above.
- [ ] the application identified above.
- [ ] the patent identified above.

I have not assigned, granted, conveyed, or licensed, and am under no obligation under contract or law to assign, grant, convey, or license, any rights in the invention to any person who would not qualify as an independent inventor under 37 CFR 1.9(c) if that person had made the invention, or to any concern which would not qualify as a small business concern under 37 CFR 1.9(d) or a nonprofit organization under 37 CFR 1.9(e).

Each person, concern, or organization to which I have assigned, granted, conveyed, or licensed or am under an obligation under contract or law to assign, grant, convey, or license any rights in the invention is listed below:

- [xx] No such person, concern, or organization exists.
- [ ] Each such person, concern, or organization is listed below.

Separate statements are required from each named person, concern, or organization having rights to the invention stating their status as small entities. (37 CFR 1.27)

I acknowledge the duty to file, in this application or patent, notification of any change in status resulting in loss of entitlement to small entity status prior to paying, or at the time of paying, the earliest of the issue fee or any maintenance fee due after the date on which status as a small entity is no longer appropriate. (37 CFR 1.28(b))

Richard C. Walker		
NAME OF INVENTOR	NAME OF INVENTOR	NAME OF INVENTOR
Richard C Walker		
Signature of inventor	Signature of inventor	Signature of inventor
5/1/00		
Date	Date	Date

Burden Hour Statement: This form is estimated to take 0.2 hours to complete. Time will vary depending upon the needs of the individual case. Any comments on the amount of time you are required to complete this form should be sent to the Chief Information Officer, Patent and Trademark Office, Washington, DC 20231. DO NOT SEND FEES OR COMPLETED FORMS TO THIS ADDRESS. SEND TO: Assistant Commissioner for Patents, Washington, DC 20231.

EXPRESS MAIL NO. EL 505 454 000

TYPICAL CHARACTERISTICS

OUTPUT VOLTAGE
vs
ENABLE G VOLTAGE

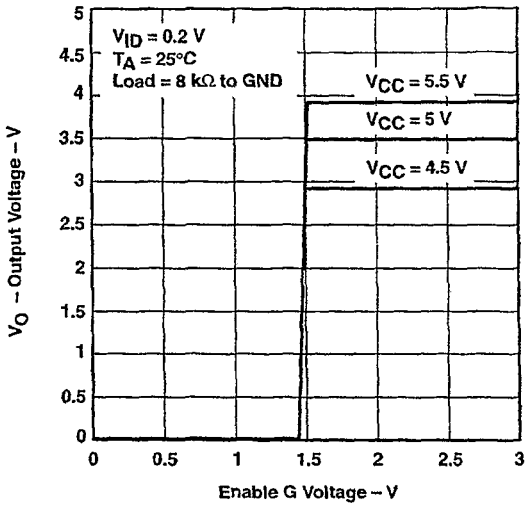

Figure 6

OUTPUT VOLTAGE
vs
ENABLE G VOLTAGE

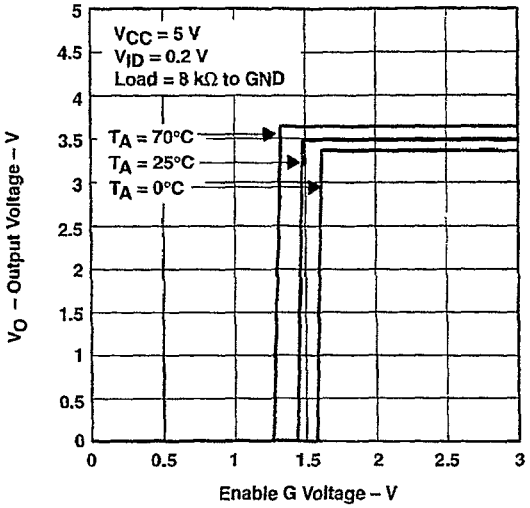

Figure 7

OUTPUT VOLTAGE
vs
ENABLE G VOLTAGE

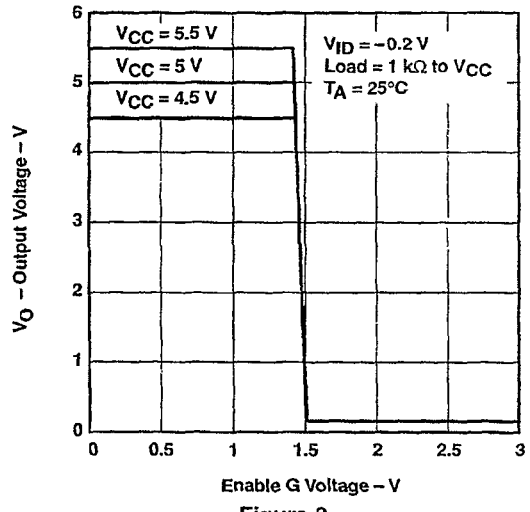

Figure 8

OUTPUT VOLTAGE
vs
ENABLE G VOLTAGE

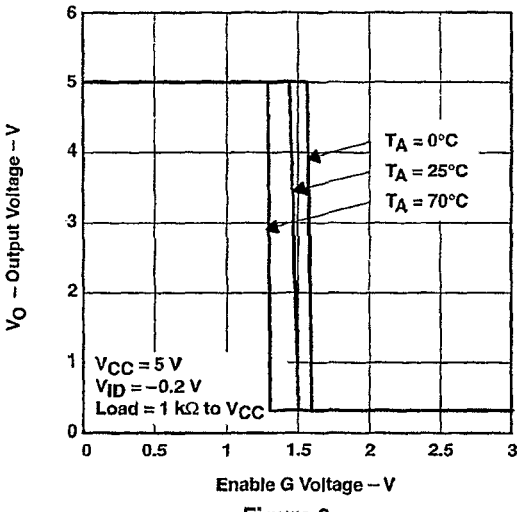

Figure 9

TYPICAL CHARACTERISTICS

AM26LS32A
OUTPUT VOLTAGE
vs
DIFFERENTIAL INPUT VOLTAGE

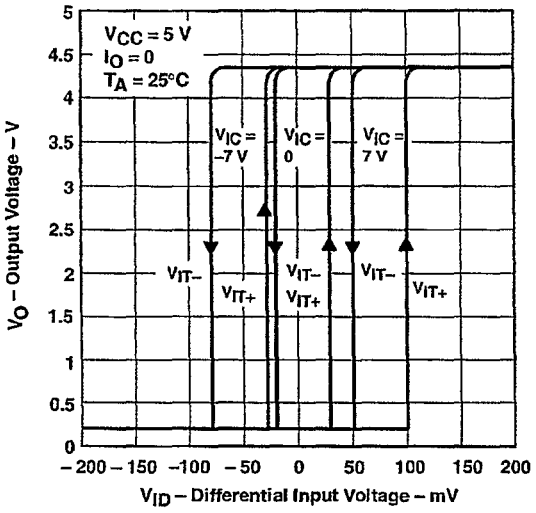

Figure 10

AM26LS33A
OUTPUT VOLTAGE
vs
DIFFERENTIAL INPUT VOLTAGE

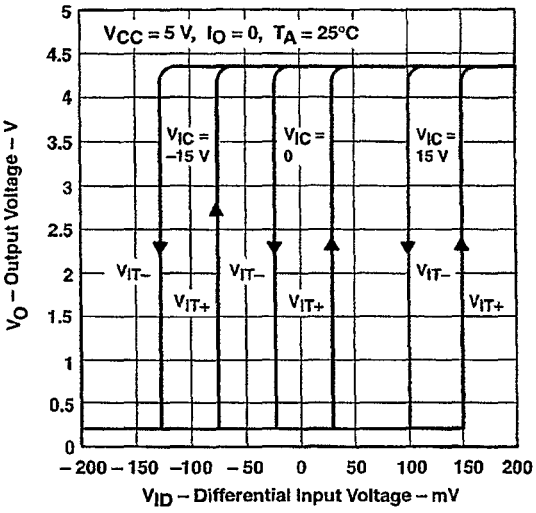

Figure 11

INPUT CURRENT
vs
INPUT VOLTAGE

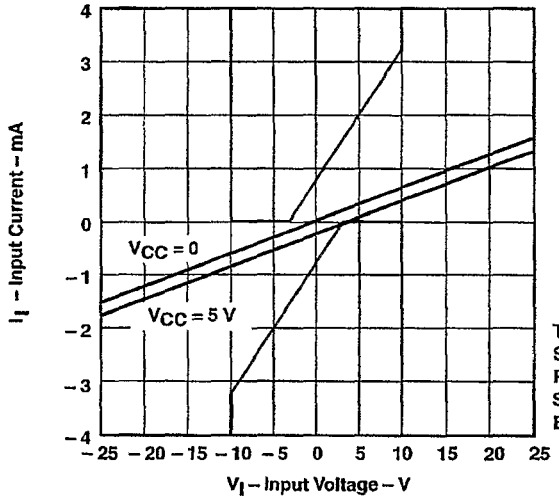

The Unshaded Area Shows Requirements of Paragraph 4.2.1 of ANSI Standards EIA/TIA-422-B and EIA/TIA-423-B

Figure 12

APPLICATION INFORMATION

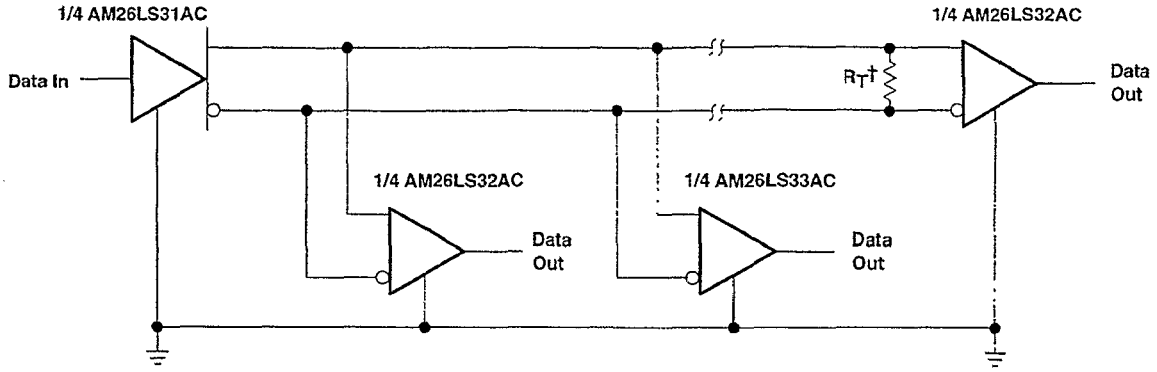

† R_T equals the characteristic impedance of the line

Figure 13. Circuit With Multiple Receivers

IMPORTANT NOTICE

Texas Instruments and its subsidiaries (TI) reserve the right to make changes to their products or to discontinue any product or service without notice, and advise customers to obtain the latest version of relevant information to verify, before placing orders, that information being relied on is current and complete. All products are sold subject to the terms and conditions of sale supplied at the time of order acknowledgement, including those pertaining to warranty, patent infringement, and limitation of liability.

TI warrants performance of its semiconductor products to the specifications applicable at the time of sale in accordance with TI's standard warranty. Testing and other quality control techniques are utilized to the extent TI deems necessary to support this warranty. Specific testing of all parameters of each device is not necessarily performed, except those mandated by government requirements.

CERTAIN APPLICATIONS USING SEMICONDUCTOR PRODUCTS MAY INVOLVE POTENTIAL RISKS OF DEATH, PERSONAL INJURY, OR SEVERE PROPERTY OR ENVIRONMENTAL DAMAGE ("CRITICAL APPLICATIONS"). TI SEMICONDUCTOR PRODUCTS ARE NOT DESIGNED, AUTHORIZED, OR WARRANTED TO BE SUITABLE FOR USE IN LIFE-SUPPORT DEVICES OR SYSTEMS OR OTHER CRITICAL APPLICATIONS. INCLUSION OF TI PRODUCTS IN SUCH APPLICATIONS IS UNDERSTOOD TO BE FULLY AT THE CUSTOMER'S RISK.

In order to minimize risks associated with the customer's applications, adequate design and operating safeguards must be provided by the customer to minimize inherent or procedural hazards.

TI assumes no liability for applications assistance or customer product design. TI does not warrant or represent that any license, either express or implied, is granted under any patent right, copyright, mask work right, or other intellectual property right of TI covering or relating to any combination, machine, or process in which such semiconductor products or services might be or are used. TI's publication of information regarding any third party's products or services does not constitute TI's approval, warranty or endorsement thereof.

Copyright © 1998, Texas Instruments Incorporated

PROVISIONAL APPLICATION

FOR

UNITED STATES PATENT

To all whom it may concern:

Be it known that I Richard Clark Walker, have intended certain new and useful improvements in:

PERSONAL PFN SYSTEMS FOR ACCOUNTABLE TRACKING REMOTE MANAGEMENT AND AGGRESSIVE CONTROL SCENARIOS

Of which the following is a full, clear and exact description:

DOCKET # 112756-700

RELATED APPLICATIONS

This provisional application docket number 112756-700 claims priority claims priority from U.S. Provisional Patent Application docket number 112756-600 which claims priority from U.S. Provisional Patent Application docket number 112756-401 which claims priority from U.S. Provisional Patent Application docket number 112756-500 filed June 15,1999 which claims priority from U.S. Provisional Patent Application docket number 112756-400 filed February 26,1999 and U.S. and PCT International Application filed January 15,1999 docket number (112756.202) incorporated herein by reference .This application is related to U.S. Provisional Patent Applications Nos. 60/071,392, filed January 15, 1998 (112756-201). 60/089,783, filed June18, 1998 (112756-300), incorporated herein by reference. This application is related to U.S. Patent Application No. 08/975,140, filed November 20, 1997. and PCT Application No. PCT/US 97/21516, filed on November 24, 1997, which claim priority to U.S. Provisional Patent Application No. 60/032,217 filed on December 2, 1996. all of which are hereby incorporated by reference.

BACKGROUND OF THE INVENTION

Field of the Invention

This invention is a parallel development of the accountable Primary Focal Node (PFN) for equipment, machines and vehicles involving machine messaging and networking by interfacing communications, mini computers, sensors , activity controls and event memory storage to create accountable management and remote control systems and product.

Here however, the same technology is detailed as a personal PFN in that accountable telemetry is being provided for people, pets other living assets and or mobile objects that may require or benefit from accountable monitoring, management and remote control interaction. Varying degrees of this invention are detailed out in this application for commercialization from mere tracking to a fully interactive personal PFN system .All systems are capable of providing accountability for their telemetry. This separate invention is being deliberately defined and isolated out from the machine messaging PFN systems for a number of reasons. But basically, to be able to write law and regulations to it's personal use, which will be an intricate part of any commercialization for all the PFNS but much different when involving people a majority of the time.

So this patent application will explicitly deal with the unique conditions surrounding tracking individuals and performing accountable remote control and management via the personal PFN invention. It will cover the use of aggressive remote control and management through the belt system detailing it's technical capabilities. This patent application will raise all the necessary questions that societies must review in determining the proper course, use and protocols for those individuals and animals that can enjoy more freedom through the invention, while they still requiring a guarded state by law and or for public or personal safety.

But most importantly this personal PFN has many benign and benevolent attributes and uses that can ease the every day worries in protected care situations without intruding on another person's privacy, their movements and their enjoyment and in many case perform guarding angle services at the individual level in real-time. There are many technical safeguards for this purpose and a strong discourse detailing the major concerns on using this technology in a respectful and social manner to help construct law and

regulations, as well as, provoke attention to individual respect and manners for proper use of this technology by everyone.

Commercially the most effective way to offer these innovations is by spitting them into man and machine categories due to how law and regulations will be applied to the actual products and their uses. Fortunately commercially this works well with existing manufacturers and in this type of development the personal PFN technology this can best fulfill it's commitment to aid in the process to organize accountable remote and automated control as has been the purpose and goal of the PFN invention from it's inception.

So therefore this application will combine throughout the specifications and claims all forms of wireless communication to perform personal tracking and accountable remote management and control functions involving man and animals particularly, but also descretes as so determined and defined by this inventor. This statement is stated presently because both the machine messaging PFN' and the personal PFNs described in this application have been created together thus far. This application is being constructed to separate and deal more with personalized PFNS. In the past they have been jointly written too. So therefore, to remove any possibility of legal and commercial discourse or mis-understanding; I Richard C Walker the inventor state; here and now in this document that I retain sole delineating powers as to what is considered Personalized PFN's and or what will be considered Machine messaging PFNs and how any of the specific technology is to be licensed between these two separate technical categories and eventual commercial entities. These decisions would of course be predicated on any legislation governing the uses and application of this technology.

With that stated: all communication mediums detailed throughout the related patents will be utilized to create these personal tracking and management systems and the specific configurations as stated in this patent. So, any modalities that essentially perform

the same tasks even though they utilize changes in parts or components of these systems are considered the same as these personal PFN's and therefore, fall within the nature and scope of this innovation "The Personal PFN "

Brief Description of Drawings

Figure 1.

Figure one depicts the first of three major different communication modalities. This figure deals solely with Radio Frequency (RF) equipment connected to GPS equipment.

Figure 2 and 2A

_The next two drawings Figure 2 and Figure 2A are first a new drawing detailing the two way paging systems and also 2A is a previous depiction of two way paging and GPS system for personal movement use (from an earlier filing)

Figure 3

This figure is of the original PFN Cellular phone and modem system called the Complete Card ™ Research In Motion LTd. RIM ™ also make a similar product as do many others both in analog and now for the ever present digital phone system CMDT and DMTD. These changes still are within the nature and scope of the invention.

Figure 4

The PFN technology will always be current because it has been created to consolidate wireless communication data processing, sensing, activity controls, and event memory storage in one organizational interface platform and make an accountable system. The PFN has always been designed to incorporate Commercial Off The Shelf Products to a (COTS) in a user friendly fashion plug, program and play where ever possible. So this figure Details COTS products and system service providers to provide personal asset

accounting to all persons cost effectively no matter what their economic position is. e.g. Person tracking or family tracking through the home TV. Ect.

Figure 5

This figure displays the easiest modality and a large number of the accessories available to the personal PFN it is not meant to be the only modality or form the invention will be constructed in. This drawing goes into more detail as to the construction of a belt system and it's purpose and all the other drawings are used to discuss the different communication systems separately but do not detail the belt structure.

Figure 5A

This figure was from an earlier filing detailing a Personal PFN system worn on a belt .(it is numbered in 22 part description numbers with it's accompanying text from the earlier filing. This will be changed in the formal application and is only used in this form to give a complete description and tie in the earlier filings.

Figure 5B

This is also a figure from an earlier filing and has the number 18.and will be handled the same in the formal

Figure 6

This figure lists some of the initial commercial products and possible names they might be marketed under.

Summary Of The Invention

The invention is a personally carried Primary Focal Node (PFN) which has as a base function to provide locating data to a remote location for a person or asset either wearing the device or having the PFN device fixed to it. Further sophistication of the device provides the same kind of accountability and protection considerations for this personally

worn PFN that is designed into all other PFNS as detailed through out the related patents. This means that variations of the personal (PFN) will range from just performing locating functions to performing an array of accountable aggressive remote control functions for application specific needs with local and remote memory storage for these events. The system's telemetry might well incorporate or provide audio and video data as well as supply Electronic Serial Number ESN data for the device and personal identity information and deliver physical telemetry of the wearer. Of course, the specifics of any particular product variation will depend on initial purpose cost and practicality. However, the initial variations of these personal PFNS are (basically determined by the type of communications package used) and PFN variations might also utilize additional processors, activity controls, memory storage, and locating systems in the same manner as has been detailed through out the related PFN patents or for the equipment PFNS. And conversely these communication systems and locating systems can also be used and applied to any of the earlier machine messaging PFNS for mobile and stationary applications.

In this application the products of this innovation have been broken out into four categories delineated by the types of communication systems they employ. The first system employs Radio Frequency (RF) equipment and uses this example as the prototype employing family radio walkie-talkies with a frequency of 462mhz or 467mhz. To transmit and receive GPS data from a Garmin 135 GPS receiver antenna, which has it's NEMA data string modulated on this carrier wave by a Tigertronics mini modulator. Then the this signal is received by a Kantronic's serial modem that demodulates the signal and sends it to a lap top or desk top computer, where it is converted by Automatic Positional Radio System (APRS) software shareware to provide longitude and latitude coordinates with a time marker to be applied as an object to be placed on calibrated bit maps such as Delorme's Street Atlas. Then by employing a software Macro in this case EZ Macros the zoom key is

constantly triggered to zoom in on the closest detail map from the default overlay map in the Delorme street atlas map program. This makes a very effective close in tracking product that keeps the asset in the center of the computer screen, while showing the whole neighborhood and stepping down to a few hundred feet around the asset or the personal (PFN) tracking device. This is done to reference the viewer and is accomplished with the combination of three software programs that are integrated to run together.

This application will spend only one drawing on the generalized concept and use of the software placement of an object on a calibrated map as it is used in the prototype for the two way radio system for this personal innovation of the PFN. This is done because the different communication systems will be writing their software command strings with IP and proprietary application level programs. However, the object placement can be achieved in the same manner if so desired. So, this is why the entire process and product has been constructed as an RF prototype and an intranet, because commercial arrangements must be made with these large communication, Internet and TV providers first. But regardless, the technology is proven through these feasibility prototypes and should help to interest these venues considerably. There is some greater detail given to some of the security applications with one figure devoted to a possible mandatory wearing of the system. The feasibility product combines three Commercial Off The Shelf (C.O.T.S) software products to create this tracking system and effect and additionally employs a limited range two way family radio with a 2 mi maximum distance in the prototype. Many modalities to increase the distance and indeed make it limitless here on earth are detailed in this application and the related patent applications

This RF version of the personal (PFN) could use most all radio frequencies , but most importantly the federal authorities FCC need to sanction and set a side a frequency and protocol for this application and use by the general public for public safety. This system can

handle multi-users by assigning call names or (ESN's) in the modulators to be recognized singularly or all units that are transmitting on the same frequency can be viewed on one computer . And if multiple frequencies are desired a scanner circuit and software function can be employed in the transceiver connected to the modem on the computer side so that in cycling all PFN stations transmitting are picked up and placed on the calibrated map system (providing privacy locks are not in place).

This is the technique that is used in the repeater function for all multi-communication capable PFNS for limited range RF. Ideally the Federal Communication Commission (FCC) will allocate a 911 type response system that uses special RF frequencies for public safety applications and certain public safety protocols including FACT program controlled scan lock hardware and firmware that can be employed to govern all special dedicated frequencies in PFNS in time of emergency (this is part of the TRAC/FACT system detailed in the related filings. These protocols could have software or software embedded firmware in the PFN hardware architecture, as well as, any other communication devices to perform emergency routing of a priority communication that need to be relayed longer distances. This would allow numerous simultaneous communication strings and pathways to reach an emergency response center (911 program, ect.) where they would be appraised with the mass data management program for the best two communication links, while dropping or clearing for regular service all other systems and equipment that initially responded. This would happen very rapidly and the process would be handled through software algorithms in the programing. This should be a program developed in conjunction with the Federal Access and Control FACT Software program detailed throughout prior related applications.

For these short range RF systems this repeater function would provide long distance capability through either stronger or more powerful radio systems within range e.g.

(PFN connected) or they would process the signal in the FACT TRAC software of the PFN employing the emergency communication protocols to re transmit the emergency data on to the 911 center via Pager systems, Cellular Phone systems, or any wired or wireless communication system available to the responding PFN. This processes is described in earlier related patent applications and for all RF systems the process used in the APRS software would create a cellular web for any short range signal. The PFNS would have a software poling algorithm performing a scan function for repeater stations and programming digitpeating software commands (communication strings) in real time for transmitting the signal to a preprogrammed destination or closest 911 response service. Also 911 center would have a powerful RF transceiver and auto response routing system . The automatic area poling software would create a mobile cellular web. After the initial contact string from the mobile PFN the controls would be determined through the software in the 911 center indigenous to the area and carrying the algorithms to determine best reception for mobile communications in the area. However, if the communication lock is a hand off to a pager or cell phone traveling near a sole RF PFN the 911 phone service would provide the link and the software poling would occur from the center of other cell and pager systems receiving th RF signal and switch to them as an automated process.

This personal PFN system has been basically a parallel development to the machine messaging network PFN (involving vehicles, machines and any equipment),throughout the related patents. So therefore it uses the same types of communication systems that have been detail earlier. It is necessary however to detail out these systems further for their use as a personal (PFN) so that anyone skilled in the art can construct these products. As was stated earlier this personal PFN innovation varies in it's product architecture basically, by the means that it uses to perform it's communication function. The next system delt with are the two way pagers.

Two way paging provides a means to transmit NEMA data in small packets and for the most part this is all that is needed for a GPS system to send tracking data back to a special web site or E-mail address that is running the appropriate software at the IP final application level to place an object on a calibrated map on the screen of a computer. By the same means as described for the (APRS) or RF systems) In this application however the ESN of the pager identifies the tracked PFN system and an Icon can be chosen as well as a screen name, which would all be part of a server or provider's running a software system. Their algorithm through look up files could find the two way paging PFN in a running buffer review file of last known transmission with NEMA GPS coordinates. This file receives and stores all transmitting Pagers they provide this service to and then a software instruction in a lookup function will retrieve location data (NEMA ASCII POCSAG, ect.) that is stored in the buffer and post the object on the appropriate calibrated map, along with the time the GPS position that was generated. (part of the NEMA clock Data received by the GPS Receive that is physically connected to the pager or integrated into it. This would be a service and apart of the pager providers web page in one modality, making all the software a system product for the paging provider. Another modality and Product of this PFN technology would be an individually purchased software recognition program bought by the pager owner and installed on his/ her's personal computer, laptop, palm pilot organizer or PFN ect, that receives their two way e-mail message. This software product would have a calibrated map package, and a program to reconstruct the GPS signal (depending on the system used and the form it is placed in by the pager interface. This is a proprietary product of this invention even if it is only in the form of a pager being located by triangulation on the pager signal through the known location of the receiving towers and placed on a calibrated bit map via a software algorithm. In this case it dose not need to be connected to a GPS receiver to be tracked. Of course Kline and Walker LLC. The assignees of this personal

tracking and PFN technology will seek out pager and cellular phone providers to commercialize both types of tracking systems and develop this proprietary set of products. Cooperation with programming with the proprietary software key codes and some algorithm writing with the wireless phones and paging systems who are presently serving theses markets is all that is needed to develop this product for their customers.

The integration of radio and GPS as well as Cell Phone and GPS are also product evolution's stated in earlier related patents as falling within the nature and scope of this invention and reasonable developments inside any PFN as well as the use of multi-communication systems . Which combines Radio with paging and wireless telephony i.e (analog and digital) Throughout all the related patents this has been the planned development of this technology as an integrated consolidation of circuitry planned and described for the PFN hardware systems and product developments . Therefore the use of these combined technologies and or the COTS products that have recently combined communication system like Nextel and Garmin who have combined analog cellular phone with their GPS. These are COTS products that can be used in any PFN through Plug, Program and Play procedures with the use of COTS software e.g. Fagawi to perform remote tracking . However, Analog cellular phone tracking will be come extinct with the loss of analog cellular service but an interfacing product none the less. With Digital CMTD and DMTD becoming the market preference all PFN cellular service will be constructed with the service providers products but will be backward and forward engineered to accept older products for as long as they have service.

Returning to the Pager the RIM pager systems and the Motorola page writer 2000 are two units that supply access port to send messaging through the pagers transmitter so long as the data is in a format that the pager protocol requires to handle the data (in special packet form). Other systems than the Flex and reflex Motorola paging systems have

also been detailed in the earlier related patent applications. Also, other variations to interface with pager technology have been detailed. However with paging manufacturing providing the physical connectable systems and interface protocols the combination of 2 way paging and GPS as well as two way telemetry have been made far easier than before and much more likely that multi communication devices will share service in PFN's as well as interface with all sorts of activity controls and sensors as has been detailed in earlier related patents and exemplified here for telemetry data (NEMA) in tracking. Obviously

A private intranet could be created with a calibrated software map library on a personal Email address equipped with the software program that processed the NEMA or text data delivered through the paging protocol to the Email address and place the two way pager's location on the proper calibrated map for the solo user or small business user. Thus two way paging with GPS is another viable means for Personal PFN Tracking or for the Machine messaging PFN's. detailed more extensively in the related patent applications.

Cellular phones is the other technology utilized by the Machine messaging PFNs and these personal PFNS and tracking devices as stated in the pager technology will emplor automated triangulation in some applications which **can replace the need for the GPS system as a locating component saving space and power use.**

This technology originally used the Complete PCMCIA Card ™ for the cellular service to the PFN but presently details more options now and the fact that the service is primarily becoming digital and controlled by the cellular service providers . So Kline Walker LLC s will seek out a coordinated effort to offer this service product in all three levels through the PFN detailed technology, which are analog, digital, with individually owned tracking software interfaced with these communication protocols, and a total system approach where the software is provided by the cellular server on a web site or as a hypertext link through

Internet providers. Much more detail on the cellular systems is in all these related PFN applications

Figure 1

Figure one depicts the first of three major different communication modalities. This figure deals solely with Radio Frequency (RF) equipment connected to GPS equipment and interfaced to modulate NEMA location data strings by modulating, either ASCII , TTL binary coded messages or any communication software over radio frequencies. This diagram depict the modality used in the present the personal PFN prototype. The drawing is general but clear to anyone skilled in the art to recreate this invention for personal tracking. It also should be noted that there are many modalities to achieve this same RF Product but any and all fall within the nature and scope of this detailed invention . Another important note is that these detailed modalities are also used in the Machine messaging modalities applied to vehicle equipment and machines, but these are being detailed here as commercial variations and products as Personal PFNs specifically for people, pets and special assets as defined by the inventor.

Object 101 is a two way hand held radio in the case of the prototype it is a small family channel walkie-talkie operating in the frequency range of 462 mhz-467mhz. The dark line between 101(radio) on the left and 102 the modem on the right represents a Mic. Line and a Speaker line as well as a signal ground line. These lines connect on the radio to the Mic jack port and the Ear phone jack port and share the same chassis ground which in this case serves as a signal ground. The right end of the mic line connects to a serial input pin labeled TXD for transmitting data and the speaker line connects the RXD for receiving data from the RF component. 102 the modem in the present prototype is a Kantronics 1200 RF modem and it has a 9 pin serial connector provided in the standard configuration for receiving and transmitting data as well as supplies a pin for the signal

ground the last connection for the right end of the left wire. Then from 102 the modem to the laptop or desk top computer N0. 103, the line to the right of the modem has a 25 pin connector that goes to a 9pin serial DB connector in the back of the computer #103. Because most GPS NEMA protocols run at 4800 baud rate the prototype is set at this rate in the computer 103 and uses comport 1. However the RF modem only runs at 1200 baud to transmit and receive over the walkie-talkie so this in the rate of this prototypes system. Down below in this drawing is the belt system and GPS transmission section that sends the mobile location data stream to be tracked on 103's computer screen.

104 is a second walkie-talkie also having a Mic port and an Ear port set of jacks. This time the Mic TXD line from the radio is connected to a Tigertonics Module 105 which is a quarter of the size of the 103 modem connected to the computer. This is accomplished with a J11 phone jack the same as used for standard phones and also used in this technologies first vehicle PFN prototype to stop the unauthorized use of a vehicle detailed in earlier related patents. This jack has TXD, RXD and signal ground connections provided through a removable J11 connector. The input side of the Tigertronics module 105 has a 9 pin connector that can be connected to a GPS antenna object # 106 in the drawing. In the case of the Prototype this is a Garmin 135GPS receiver. However experimentation with Delorme has also been done. All the GPS antennas are not the same and they run different software communication programs in their firmware. For this reason it is important to know if you are working with Binary codes eg. Rockwell serial or ASCII or TTL or reversed TTL in choosing the modulator 105 and the Modem 102 as well as the proper software programs to the GPS data. at the application level for the calibrated Bit maps on the computer 103. The hardware connection from 105 to GPS 106 must support the functions necessary to satisfy the GPS 106 receiver protocol for transmitting as well either with the DTR Data

terminal Ready of the RTS ready to send signal as well as support the TXD and Signal Ground.

NOTE: Product hardware consolidations will combine the part 106 GPS receiver with the modulator and or demodulator circuits 105 and the radio transceiver 104 in one board in it's tightest configuration with special consideration to the RF antenna and GPS antenna for interfering with each others performance for the personal tracking belt and system.

For the monitoring function the modem circuit or demodulator 102 will be on the same IC with 101 the radio transceiver or receiver component. This system can also have a AC power cube /DC converter for 6–9vdc to either charge the radio/demodulator unit or just power it. However this system would either have it's own power source or be able to receive power from the power pin on the DB9 connection on a laptop for mobile movements.

To reduce cost further this product for personal tracking only has to communicate in one direction . Which means the personal tracking portion on the belt need only a transmitter and a modulator with a GPS receiver, and the monitor portion only need a compatible demodulator and radio receiver with the interfaced computer and viewing monitor.

Before returning to the computer software to run the tracking function with these connected hardware products and components a moment must be taken to explain the power systems on the belt .

Power is provided by either a rechargeable battery pack on the belt for the mobile operation with (accessory solar cell strips with velcrove stick-ons for hat or shoulder pad mounts that plug into the belt power pack. A temperature sensor on the battery packs disconnects the solar cells if they reach 109F (experimental charge regulator process for Ni Cads, Lithium, and Alkaline. Temps for safe charge not equated at the time of this

provisional). Power first enters the modulator105 the passes though the power switch and fuse and then enters the modulators voltage regulator circuit and is passed out pin 9 on a standard DB9 serial pin to energize the GPS receiver. Battery ground exit Pin 7 to the GPS receiver completes modem and GPS power requirement with additional 5 volt regulator installed to adjust power to energize the hand held radio unit that is interfaced as the transceiver. This basically is the prototype at the present time, however in the products to follow all sorts of telemetry is possible, as well as, providing accountable remote control and management though the two way communication and memory storage components. Other components on the belt system will provide a locking clasp and security line that detects the real-time removal of the belt or tampering and reports and records this activity for authorized conditional freedoms ect.

Returning to figure one to discuss the software used to create this feasibility prototype. The software running 103 the computer to utilize the NEMA GPS location Data generated and received thus far are as follows. The initial software to handle the RF modems software NEMA code data is the Automatic Position Report System (APRS) software shareware protocol. This program converts the received data into GPS coordinates to generate and object on a calibrated map. For the Prototype the Delorme 6 edition of Street Atlas is employed however maps can be created and calibrated as a library file and the APRS software will pace the tracked object on those Map . These two base programs place the object on the map but in most cases the overlay default map in these commercial products is to general and they do not support a continual zoomed in view on the personal belt location, when combined with this APRS share ware needed to update the small movement of an individual walking ect.

The zoom feature serves a most necessary purpose and function of these personally worn locating products, which is to instantly and continually acclimate the viewer to the

area. To accomplish this a third piece of software was required to make this a great product. The objective was to zoom in on each update and hold the zoomed in position in the center of the computer screen and repeat this process at each update (timed at 9 seconds for the prototype -but adjustable). The present prototype zooms in from a approximately 7mi radius to an area of less than .1/2 block. This is accomplished by using a Macro and keying the computer key board function to zoom at the desired time to the most detailed bit map in the library . Of course a zoom out to a national view is equally obtained if so desired

Kline and Walker LLC in the development of these products will work directly with the calibrated map companies like Delorme, Garmin , Fagawi, Tiger maps and or any government mapping programs ect to accomplish these functions and make these personal PFN commercial products more user friendly for the general public. These functions will be easier to create through the proprietary software commands after knowing with the correct software codes. This is the main modality to make these products user friendly.

Once again this is not the only modality to create a personal RF PFN Tracking System and any number of frequencies can be utilized through this present modality and many are named in this technologies prior related patents. But this is an easy to understand way to create a feasibility prototype of this invention to perform inexpensive short range personal telemetry of an individual or pet's movements. It also supports all the feasibility necessary to prove this technology as a personal PFN system for all the detailed communication modalities.

Additionally this range can be increased by different radio systems, repeating or digitpeating though other radio stations such as amateur radio or ham operators, or by repeating through other PFNS either equipment PFNS or these personal PFNS that can pick up transmissions through programmed scanning capability or by programmed digital transmissions which respond to emergency protocols or digitpeated commands as a

transmission string. This software is running in the APRS shareware program. Additionally, the hardware consolidation into an integrated circuit configuration for these interfaced components or devices is a regular activity for anyone skilled in the art of reducing and drawing up IC boards for radio frequency equipment. Meaning any product resulting from this inherent described and predicted process is all with in the scope of the PFN invention and should not be considered unique, therefor falling within the nature and scope claim of this invention.

Note: From the first description of using short range RF systems in PFNs a repeater function has been detailed and described as a major function for providing long range capability out of small radio transceivers. In all the prototypes in this application short range RF systems are employing the 2 way family radio frequencies of 462. Mhz and 467. Mhz. These are by no means expected to be the only frequencies for these applications . All of the applications will have to receive government approval from the countries governing agencies such as the FCC here in the United States.

FIGURE 2

The next two drawings Figure 2 and Figure 2A are first a new drawing detailing the two way paging systems(fig 2) and also 2A the previous depiction of two way paging and GPS system for personal movement use. They are being shown together in this applications to substantiate the earlier filing of the idea and to bring all these personal tracking and PFN

devices in to on area for commercial development. Both the old and the new drawings and descriptions will be covered in this pager section.

In figure 2 on the left side is a computer either a Laptop or a desk top computer with three numbers on the left side. The numbers are 201,202, and 203. These show the

possible commercialized products that can be provided from a pager locating system. In this pager locating modality a GPS receiver is likewise utilized . But also the pagers locating system a signal triangulation algorithm in the system software

Note:

So the use of a cellular phone or paging service software running a triangulation algorithm using the fixed position of the towers for cellular phones and or two way pagers, to locate a specific transmitting pager, phone or combination device's position in relation to the known position of the towers.

This technology is claiming this technique to locate a specific two way pager's transmission signal as an alternative locating modality for both types of PFNs (for people and equipment units) . This system will save space by removing the need for GPS in many cases where service is good and the need for a large battery. This will be a much improved modality for this innovative locating device in the future which will be provided as a product improvement by inheritance for this technology. Kline Walker LLC will strive to develop this tracking modality (Systemically) with companies like Nextel, Motorola , Bell Atlantic and other pager companies, who are developing larger short radio messaging tower networks and multi-communication systems and devices. This has been explicitly stated here and now as an other modality for this same personalized tracking device or PFN and is considered with in the nature and scope of this invention in any evolutionary form.

Returning to figure two, 201 on the computer is a commercial web site that supports maps and tracking service most probably provided by the paging service. By using the paging unit's ESN from the paging service's system software the (two way radio, or wireless telephony) would generate useable earth coordinate data obtained by distance and directional sensing equipment or functions performed by the receiving tower hardware and

firmware and send this data to a paging system software via paging system software protocols, which during the process of the signal employs an automated triangulation software algorithm based on known receiving towers fixed positions on the earth to provide at least an accurate two dimensional fix of longitude and latitude to be applied to a bit map or calibrated map program to be run as a web page, personal E-mail shared providers cable or Satellite (joint ventures with pager provider) or run on an individual e mail site through the persons Internet provider with/ IP protocols and application specific software (possible joint venture Internet provider and Pager provider)at the application level with all data transparent till the end user inputs user ID code Pin number password to bring up the tracking and location telemetry on the bit map on a computer monitor or other viewing connectable device e.g PFN assets as detailed through out this and the related filings.

Or as they received pager message packets transmitted into the system the messages would carry NEMA or GPS data in some formmat from a connectable GPS receiver that is interfaced to a two way pager (proccessing separate or as part of an integrated circuit), which when activated would allow the service software to pull up the correct calibrated bit map and pace the identified paging unit ect. as an identifiable Icon, number, symbol ect. to the computer viewer, when they entered the correct pin ID upon entering the web site as the correct authorized subscriber to the service. 202 represents the same process operated by government agencies, for conditional released of convicts or parolees. This application would allow the judicial and law enforcement to monitor restraining orders in real time along with dispatch medical staff and perform interdictor functions if need be. This technology is detailed in figure 9. Also, victims can be given alert reports and visual updates,

by automated Page messaging, Email, and telephone messaging embedded in the software command structure to be entered by the authorities . And the Government can

defray another program to cut health care cost by providing this service to the economically destitute in need of a watchful eye for the mentally handicap those with dementia, Alzheimer's suffers or the severely physically handicap where expensive nursing service can be either reduced in cost and made better from professional or a family member. More freedom can be given to the health care provider because they can monitor a disabled patient or love one in one location including vital signs while doing other activities near by. Drug firms and Insurance companies could sponsor these web site inexpensively or free with other advertisements running to pick up the cost. 203 can be a personal e-mail address where the individual has purchased the software to run on their personal equipment making it an intranet at the very least. And of course they would be capable of sharing this tracking with other agreed upon email web sites. Much of the technology has been detailed for this in the Radio frequency modality in figure one , however there is some other modalities possible to achieve this for all three of these configurations and product offerings 201, 202, 203. One of the simplest hardware configurations employs a GPS receiver 206 (Garmin, Delorme Lassen, Rockwell Jupiter ect. or a chip set and antenna Philips, Motorola ect with the appropriate op amps and connectable interface with a processor (Stamp computer) that is programmed to condition the NEMA signal into a packet of characters for the pager protocol and interface with the two way pager and send the command to the pager device 205 to transmit the GPS NEMA data packet in pager protocol to the paging service that has the software command to complete the programs described above. This of course is done by using a developer program from the paging service to interface with their protocols. Once again Kline Walker LLC has detailed this out as a commercial undertaking with a number of companies because of geographic dominence in the market place. First contact will be with Motorola's flex and reflex protocol companies in the United States and with RIM pagers in the Canada . Nextel also does short radio messaging in both Canada and the U.S. In Europe

and the European Radio Messaging System ERMS Phillips and Erricson ect. . These companies and commercial plans are being stated to increase understanding and cooperation to achieve a working relationship with these manufactures to develop the entire PFN system

So the RIM pager systems and the Motorola page writer 2000 are two units that supply access port to send messaging through the pagers transmitter so long as the data is in a format that the pager protocol require to handle that data. other systems than the Flex and reflex Motorol paging systems have also been detailed in the earlier related patent application . So many other variations to interface with pager technology have been detailed previously. However with paging manufacturing providing the physical connectable systems and interface protocols for the combination with any 2 way paging and GPS as well as two way telemetry have been made far easier than before and much more likely that they will be part of additional multi communication devices serve this technology's PFN's effort to act as an organizational interface platform that provides accountability for all sorts of activity controls and sensors as has been detailed in earlier related patents and exemplified here for telemetry data(NEMA) in tracking. Obviously A private intranet could be created with a calibrated software map libray on a personal Email address equipped with the software program that processed the NEMA or text data delivered through the paging protocol to the Email address and place the tow way pager's location on the proper calibrated map for the solo user or small business user. Thus two way paging with GPS is another viable means for Personal PFN Tracking or for the Machine messaging PFN's. Along with cellular and pager automated triangulation protocols (product construction and commercial arrangements will determine locating technology employed in this technology's personal tracking devices or PFNS

204 in figure 2 is another paging device capable of receiving direct two way paging and this device supports an LCD display and firmware for displaying tracking to display another remote location two way pagers location as well as it's own position from it's GPS connection or if a pager system is running triangulation algorithm to provide location from tower distances rather than GPS.

Returning to the drawing as a RIM pager 205, specifically a IP-950 pager is employed in case a Trimble Lassen SK8 GPS will be used as the GPS receiver . Through the CommRegisterNotifyPattern feature of the pager the serial port will be closed and being charged through the PFN processor running this firmware. The PFN processor will be connected to pin 2 DTR output and pin 4 DSR in put of the IP950 pager .There is already a protocol written for the software commands between a processor , Rim pager and GPS receiver in the appendix of this application , which was down loaded off the Internet from WWW.fleetcommunications.com . However the pager 205 interface communication in this modality to the GPS 206 is through TXD_A and RXD_A under TSIP/normal RS-232 for TAIP or other protocols. In this case the serial port communications take place at 9600 baud, 8bit data No parity stop-bit 1(9600,8 N,1)

The default protocol will be TAIP format. All hardware terminals and contacts as well as software commands and protocols are in Appendix I . Other two way paging products and protocols for locating systems through Motorola products like Page Writer 2000™, Create a Link II™,ect, have been detailed in related PFN patent applications 208 in figure two is the belt 209 is the power pack 210 is the clasp for the belt and 211 is the security line and or antenna which is completely detailed in figure 5. Figure 5 will detail all the specifics for the personal tracking PFN system and all the hardware connections. The belt bracelet collar or clasp system is in no way the only modality for the personal PFN to be deployed on an individual or and animal.

It may take the form of a concealed device in a garment or actually be surgically implanted in an individual or animal and powered though contrasting metals that would create a potential in the body fluids making the body a battery or have a power supply much the same as a pacemaker or an automated internal PAC or medication dispensing device. These modalities were discussed in earlier writings and details as to the protocols and specific actuators for these personal PFNs will be entered into any open PFN patent application for the technical specifications however, any and all actuators linear of rotational compete or fractional have been detailed so that anyone skilled in the art can readily construct any application specific actuator control it and energize it. Of course internal PFN implants, (Transponders) have to be small in size low in current demands, so actuators would be constructed from small actuators or MIMS micro machines as small as lice. And created at the nuclear labs at los Alomos. However, the same engineering for liner and rotational actuator applications for normal size electrically controlled devices would be employed. And obviously they would be constructed and placed with medical experts.

FIGURE 2A

This figure is taken from an earlier related patent application and it is being entered here to use the figure and description to better detail the invention and to isolate out for commercialization the personal PFN and tracking system for people and pets.

Figure 14

1401 is a belt buckle that has a special key to release the locked buckle or electronic lock or any kind of locking mechanism. 1402 is a hard nylon or similar plastic flexible strap resistant to cutting in the most practical way, that has and inner liner of nylon strap so that one or two way pagers and or a G.P.S. system like Motorola "Oncore"XT, XTsII,GT, UT, VP or Philips G.P.S. chip set mentioned earlier in this application can be secure and concealed in an protected enclosure between the two nylon straps to store these G.P.S. components along with differing levels of transmitting devices that can receive signals or

messages, transmit signal or messages, and or alert of sound alarms on both sides of these transmissions.

This 2A is Figure also 14 from an earlier PCT and U.S. filing for this PFN technology

Figure 14 displays varying levels of one way and two way pagers and C.O.T.S. paging protocols as well as voice paging applications. However, as earlier mentioned; this invention provides for short RF signal transmitters with their transmissions received by every piece of equipment that has a PFN. and will ultimately all have RF transceivers to receive these emergency priority signals and condition the signals and repeat them in a pre programmed manner over what ever long distance communication hardware that exists in the PFN to the proper authorities. This is a repeater function deserving of special consideration and is not the same technology stated hear for the pagers in Figure 14. As has been described and maintained through out all these applications. However, these types of carrying systems e.g. belt or bracelet or even clip or tape on systems and the qualities, properties and capabilities claimed and demonstrated for figure 14 are the same as claimed for the repeater technology as well. (*Note: this figure description is from an earlier patent application and is referring to repeater Rf systems and PFNs as mobile stations. For personal PFNs*)

And while they can perform many of the same tasks they are two distinctly different technologies, and are herein so stated, however equally protected in this and the related patent applications.

The G.P.S. chip set or IC board is represented in Figure 14 by #1405. 1407 is the patch antenna for the G.P.S. and this cable would be place into the belt and follow the contour of the belt to be concealed. 1403 is an extra battery in some equipment variations and a way to give longevity to the entire locator belts functions. 1406 is a speaker or a loud speaker if a monitoring protocol determines it to be the best option to send a message either via a pager or cell phone signal, e.g., Motorola reflex protocol to alert the person wearing the belt, e.g. , criminal leaving a restricted area, or child lost and a public announcement is desired to seek aid from responsible adults in the area. The speaker could also emit a loud electronic whistle or shrill alarm intermittently to attract attention to the wearer of the locator belt or band.

All of this would be initiated from a remote phone page or cell phone call. Some of the C.O.T.S. Pager products that will be used in the proto types are the Creatalink pager

processor both one way and two way, the standard one way and two way pagers (reflex protocols) using the interface technology detailed in earlier related patents e.g. current sensing as was done in the first patent and Binary/ASCII/NMEA BIN/Loran from the G.P.S. all processed into 20 bit data segments to meet the Motorola reflex protocols for transmitting return data. Either through soldered connections, or BNC connector DB9 for RS232 as already detailed. The software for these applications are available for product development for this product through Motorola and only the specific software commands must be written to create the desired functions. This is easily accomplished on the PC and downloaded into the chip set processors.

This is the case for all the interfaces described in these application and due to the many different types of combinations to achieve even this simple locator belt it is not practical to write the exact programs and in fact is much more clear to describe the functions verbally or with flow charts and list all the hardware parts and software components available for even the unskilled to write programs. Anyone skilled in the art and even a hobbyist who can read will be able to buy these parts and the software packages and write these basic controller programs in a matter of hours. This is why the functions are focused on rather than any specific basic programming command string.

1408 is a voice recording chip to give prerecorded messages as triggered from phone pages as described in the first related application for the stop and control box. 1415 is a processor if the Creatalink is not used and it could be a small stamp computer. A Stamp Ior II; although Motorola and Philips as well as Siemens Tech, Radio Shack and a host of others all make micro controllers or processors to turn on the voice chip and speaker or hailer when they receive and recognize a coded message from 1404. Or if the water sensor sends a signal (the small square [W} in 1408 indicates a water sensor which would go off if the wearer of the belt was being submerged in water. And Of course all the electronic equipment is made water proof.

1404a shows a C.O.T.S. standard one way pager with the inventions proprietary non intrusive battery peg 1409 connected to a current sensor chip exactly the same as the first patent for the stop and control box to sense a silent pager vibration activation. The chip is connected to the voice recorder chip so when a phone page is received it draws current down out of the battery peg circuit and creates a ground on one pin of the current sensor which triggers the voice recorder or howler or hailer through speaker 1406a message or noise. And or a small micro controller with a EEPROM can run firmware programs to alert the surrounding public or in a two-way pager reflex protocol application monitor 20 character bit audio sound bite of what the wearer is experiencing. And the power is supplied by the battery 1403a in the in the recording system. These systems could also use the same system as the PFN.'s and record the surroundings or report back sound and or data.. So with special monitoring equipment on hand these pager locator belt systems could call in if someone had a medical emergency or hit a panic button.

1402 is a belt on a man walking on earth. 1410 shows 4 satellite a minimum for getting G.P.S. coordinates and most systems mentioned use at least 6 satellites and as much as 8 channels are available for taking a reading in all the Motorola chip sets. 1411 (SG) tower is a commercial server or land line phone node or gateway as has already been thoroughly described. 1411 tower will pick up the page signal or RF signal or Cellular system, if these technologies are employed and convert them through phone modem and transmit that signal down a ISDN phone line or comparable to at least one computer 1412 that is running a G.P.S. program to monitor the Bin/ASCII/NMEA earth coordinates and time coordinates data transmitted to 1411. Also as was described earlier the coordinates could be monitored from the car 1413 if the car was the phone data node or the car was able to network with 1412 to receive down loads for the data of earth coordinates. All easily accomplished as described earlier .The second figure down in upper left is

the belly belt locator belt laid out flat. And 1401 is the lock buckle 1403 extra battery 1404 is the pager 1405 G.P.S. 1406 speaker or hailer or howler. (*This description of figure 14 relies a lot on the detailed technology of the entire earlier patent for the equipment PFNs so in reading this description remember it is necessary to read all the specific modalities being detailed in this application for pagers, RF equipment and Wireless phones. The drawing and concept are the main points of this figure and that the personal tracking device or personal PFN was an early parallel development with these varied communication systems and locating equipment as well as varied configurations detailed earlier as consolidations of devices into muti-tasking equipment arrays involving Telephony and location equipment including such product as mobile office units, which were designed to plug program and play with the equipment PFNs*)

FIGURE 3

This figure is the basic cellular tracking system that has always been a part of the t earlier related patents in uses the PCMCIA Complete Card ™ which is 305 in figure 3 (RIM also makes a comparable PCMCIA card with a cellular transmitter, a 386 processor for the modem and an antenna) The PFN technology has been detailed through out the related patents for anyone skilled in the art to construct each COTS component that is used to create the feasibility prototypes. But additionally a crucial component and quality of this PFN technology is to be constructed to be user friendly and produce an accountable electrical interface platform of plug, program and play user

friendly forward, present and backward engineering capacity to accommodate a large variety of devices and achieve as universal interface as much as possible.

So either of these cellular modem transceivers will function well for this variation of the personal tracking belt or device. There is also a myriad of newer cellular modems coming on the market everyday and some have protocols that provide programming for DTMF functions or automatic dialing. However this invention was also designed with an additional mini computer 307 which would perform the preprogrammed dial up functions to report the GPS 306 data to a phone line connected 304 or wireless connected 302. 307 will have local memory to perform accountability for activity controls communication and the verification of data reported for complete personal PFN functions 306 is the GPS receiver which in some cases will be connected directly to the RXD and RXT as well DTR RST terminals in the PCMCIA card connector and the proper electrical connection to energize the card to the battery 308. Many battery pack and charging systems have been detailed in this application and the related patents and will be by passed in this discussion presently as obvious to anyone skilled in the art and as inherited from one communication modality to another as detailed earlier. 309 the belt and 310 the belt clasp either locking or not (this will be described in figure 5).Of course if the mini computer is in the loop then their would be software to process the incoming data from the GPS and outputting it to the cellular modem and calling the correct number. Once again if a software protocol and standard is being used by telephoney company systems many of these communication functions will be handled there including IP protocols and final application programming to display tracking or report other reported data streams. These protocols have been named

DECLARATION

and the developer programs have been named. But as welcome as these advancing phone technologies are to the PFN system they have been predicted and described as consolidations of communication and processing in all the related PFN patent applications and still fall within the nature and scope of the invention when employed for these purposes of accounting, locating remote management and control. Garmin came out with a a GPS Phone recently that when coupled to an other companies software can track the phones location though polling the GPS phone through call to receiver dial tone response to perform a look up function on fagawi software and maps that are calibrated and will correlate the tones to latitude and longitude which relate to a specific bit on the map. These of course originate from the Garmin GPS receiver in the Cellular phone and are processed from NEMA data or Binary code ASCII or HEX to the dial tone sounds in a micro processor with this burned in firmware then they are transmitted over the phone where they are recovered with the Fagawi software operating with of course an IP phone connection modem and computer plus monitor. This is two companies selling two products that can be put together to perform this function and this technology has been described in the PFN'S earlier patent applications and is considered another prior modality to be used with analog cellular phone RF and Pager systems to send data DTMF of any type wireless . For this technology of course the limitation is speed and the amount of data but it is suitable for tracking. This system has been used basically for analog signals and PFNS will be capable of interfacing these systems.

The real need of the PFN requires digital communications for efficient data handling. Presently most all the wireless communications are being converted to digital DMTD or CMTD for the major phone providers. This of course provides greater

security, which is the main reason for the change. This security is needed for the PFN functions as well. The next drawing is a detailed consolidation of communication systems involving two way radios, telephones, and paging systems in one wireless phone system Nextel.

This is a described combination of communication systems through out all the PFN related patent applications and fits right into the multi-communication array and plug, program and play capacity as a consolidated improvement

INTERNATIONAL COMPONENT NOTE:

Research In Motion Ltd. RIM is a company in Ontario Canada and the manufacture of wireless communication components that can be utilized as an other modality in constructing this invention the either the personal PFN and or the equipment PFN. Even though some of their components have already been detailed in earlier communication modalities e.g. RIM Pager-IP(Internet Protocol 950 for pager tracking in figure 2's description they like Nextel have many of the communication capabilities to provide either singular communication components or a combined array in the PFN. Plus they have different market concentrations and slightly different product quality offerings in their respective markets.

Before entering the combined communication array of Nextel and it's modality in the PFN technology a close look at Rim's OEM Radio-Modems prove to provide some other components for yet another modality to perform all in one cellular, processor interfacing that can support GPS or data streams to be handled as Telephony gateways to IP computer monitoring for tracking by placing mobile GPS/Nema data

objects on a calibrated map. Through a tracking software program either running in the computer or a system software transmitting data to an individuals computer or even an other wireless Ip device. Once again just by running a triangulation algorithm that factored the reception towers position in the providers software rather than to have a GPS component with it's additional size, power requirements and difficulties in receiving in buildings. makes this tranagulation system software technology have some very important attributes that can be a great improvement or enhanced in any product offering for these PFNs. Especially the personal PFNS or personal remote tracking devices. Or in conjunction with GPS provide a ground signal component to the inaccurate commercial version of GPS in PFN applications that will require pinpoint location accuracy in 3 dimensional tracking (much like the 4th earth reference signal used for military accuracy with GPS to adjust for the ionosphere deflection of the satellite signals sent to the earth bound GPS receiver units. This is accomplished with through a software algorithm using both sources of location data and (fuzzy logic). This system will be used to acurately guide vehicles on the roads with other sensors communication functions and video imaging as has been detailed in earlier equipment PFNS.

Returning to the Rim high performance RF transceivers . And the first point is that these could be used to provide Radio close circuit systems at an approved frequency and in embedded in a system as described in figure 1 to give great range to a close circuit system with 2 watts of power to the antenna in essence these units would replace 101 and 102 and 104and 105 as two combined radio/modems on either end of the communication between the GPS unit and the computer from bottom to top in figure

1. Of course the software and firmware configurations would be essentially the same and there would not be any reliance on towers in general. However this also could be a possibility.

The main purpose in naming these Rim Radio Modems 902M and 801D and 802D RIM Radio Modems is that they are operating on 900mhz and 800 mhz and function through basically cellular or radio messaging frequencies and protocols used by the wireless telephony industry companies and their provided IP gateways. This of course is another communication option for the multi-communication array capability of PFNs in general.

For this reason Kline and Walker LLC will seek to develop this inventions products. That will employ these components through the modalities in this application and the related application in the respective geographic market areas. This would include in Canada Research In Motion LTD , The owners and operators of Mobitex packet-switched narrow band n s t work, which is designed for wide-area wireless data communications. The operators or service providers would include, BellSouth Wireless data in the U.S. Bell Mobility in Canada. Also for the 800MHZ RIM's 801D and 802D where DataTAC® is the narrow band wide area wireless communication network . Kline and Walker LLC would seek in the commercialization of this PFN invention ARDIS in the U.S. and Bell Mobility in Canada. Others would be sot in other international markets like Asia Australia and Europe as they employ DataTAC® or Mobtex or a compatible packet radio software for these frequencies or onc those wireless systems so designated by the governing authorities.

It is important to remember that much of the PFN system is designed as a data acquisition system, as well as, an accountable remote management and control system that's primary objective is to aide in the responsible use of resources and equipment both environmentally and economically for all societies in a fair manner. This is why the use of various manufactures in their areas of market dominance are named and indicated as part of the PFNS technology business plan and market strategy. Also and especially, for the equipment use PFNS Kline and Walker LLC will seek out the World Bank and the International Monetary Fund to aid in addressing economic and environmental impact issues with the use of this PFN technology . The PFN system was created to prepare accurate data for the public and private interests groups to review in real -time so that the most cost effective beneficial decisions based on real data, education, deliberation that reesult in an all points bottom line reality check presentation can be used in making proficient commercial, environmental and social decisions, regarding investments and projects so that the cost of negative public opinion is reduced, while encouraging private, and public investment and understanding in the process that is presently receiving poor public review. Ideally the PFN system will reduce time, money and resource waste on policy that is clearly un-beneficial or even corrupt and badly in need of public trust; and conversely help to educate all to support those worthy pursuits that are beneficial and develop a better quality of life, an economic tool to relieve social tension for a peaceful coexistence. The PFN factor can become an accurate economic tool for appraising any financial endeavor or investment made by any Company, Government, Bank ,or project, ect., especially the equipment and

environmental PFNS detailed in the earlier related filings. The PFN system could be a condition of securing investment funds . This accountable data acquisition tool can aid to provide financial stableness to the investment process including the stock market.

Definitely ,when used by responsible individuals in a free and fair world the PFN system can be an optimum tool to develop trust, and a quality life as is so greatly needed in this populated earth where population management, environment and resources fairly and efficiently balanced for humanity to be supported in it's physical existance.

Figure 4

Motorola's Nextel systems as combined COTS products

Integrated Digital Enhanced Network service (iDEN)®

Combined digital Cellular with Motorola's Nextel Direct Connect® a digital 2 way radio for instant private and group conversations and text numeric paging in a single phone This system has greater security for communication data. As a primary communication device in both the personal and the machine messaging PFN's these Nextel and Motorola protocols will be a good step in interfacing and organizing COTS communication products in PFN's (both personal and for the machine messaging systems)

The Nextel Direct Connect® system operates like a two way radio through the system routing function deciphering digital message headers of preprogrammed ESN address and quickly routing a communication link to the correct hand held unit or units. This technology will function well to create intranets for machine messaging in

the PFNs involving machines, vehicle and equipment and for personal PFNs, such as the ones detailed in this patent application and the related patent applications

However, due to Nextel's use of a limited range of carrier frequency for all their functions, most communication systems in PFNs will still require a transceiver unit with scanning capability and function covering at least some other specific radio frequencies (emergency channels ect), pager frequencies, and cellular phone frequencies(that have emergency protocols that will be handled by the PFN processor or have software or burnt in firmware(for repeater functions or digitpeating signals) in a combined communication device constructed in the future. When these combined communication functions and locating systems are consolidated and integrated to perform accountable messaging they fall within the nature and scope claim of this PFN technology and are also claimed as COTS interface products which have been described in earlier related patents prior to these latest Nextel phones products e.g.(i500 plus™,i700plus™, i1000plus™

Shot Message service SMS paging in a PFN when interfaced with the PFN is one modality to provide one and two way paging to any PFN, and as part of a Nextel product offering secure cellular digital phone service and simulated two way direct Radio protocols a most Ideal way to perform accountable remote control and management. These systems are conserving space in the PFN. And with an additional memory function available to the paged messages in Nextel's SMS this could act as a local memory loop required in the PFN for accountability . Of course, the entire phone or this memory function part would have to be contained in a protected area physically and electronically from tampering. Also, the web page control system could utilize

Nextel software to send a remote control page to a PFN either personal or to an attached piece of equipment to perform an accountable remote activity and record that command in the system buffer(Mass data Storage System) as well as an local memory supported in the PFN. Then other software Macros can be written and employed to key stroke commands in these running software programs on web pages to further automate the process, or by knowing the appropriate key code for the software program enter the commands to become an operating component of the running communication software program. Of course for PFN mobile tracking any of the communication systems can be employed to send any NEMA /GPS data back to a personal web site so long as the software is appropriate at the application level to place the coordinate data with the right identification data as an object on a calibrated map on a computer screen, monitor or interfaced TV with Video Game Map Program. Or processed by commercial TV server boxes. (This is a new concept for a cheap product for those that do not have a computer.) (a video game software program that is a calibrated map program and could be hooked to an RF modem interface w/proper connector , or inexpensive phone modem interface, to receive the Personal PFN's locating data and place the located object position on the correct map on a regular house hold TV--- or this service can be offered by the cable and satellite TV people in conjunction with cellular phone and pager servers through communication links (IP, ect) that routes to the subscribed recognized PFN ESN signal with NEMA GPS or any location data .The PFN / ESN signal is ID by the communication device being served (may also carry PFN/sn) then the communication server sends the data stream to the subscribers cable , satellite, or computer provider or web site or E-Mail address (as directed by an accompanying

command communication string that is created by the subscriber at the time of acquiring the service – this is entered into the systems operational software so that the location data (or any other telemetry) becomes available to the account holder or their authorized persons, when accessed by a specific pin number or security code, which will unlock the transparent data or encryption in the final application software (either local or systemic run) for these end users to view location and see any data telemetry from their mobile PFN asset. Either on their regular TV, or computer monitor (other such viewing devices may include wired or wireless lap tops, palm tops, organizers, GPS handheld units with communication capability, Cellular or wireless phones or pagers with displays and appropriate tracking software named here as separate personal PFN technology devices and variations, or displayed by a PFN system equipment or personal version). These descriptions have been detailed as a PFN priority system for tracking assets inexpensively for people, pets and their personal objects involving and employing a variety of devices. It applies to both the personal PFNs and the machine, vehicles and equipment PFNs. It can be operated as an intranet on limited RF equipment for limited distances or it can be a limited intranet through repeating or digitpeating through other PFNs as relay stations. Or, it can be a closed circuit intranet by IP protocols and proprietary protocols detailed above till the data reaches the subscriber at the application level, where personally owned and operated with a phone modem computer and software. Or the subscriber can authorize their communication provider to route their personal tracking or PFN telemetry for any data through an IP gateway to the Internet via commercial private, public(Gov. or Non Profit gateways) or, the inhouse communication provider's IP gateway link can be the route for sending the data to a

common company owned web site for general viewing. Or subscribers personal e-mail wear the Internet provider supplies the posting software to convert the signal to display the telemetry data through the correct software and viewing screen architecture for e.g. tracking (maps), physical telemetry (graphs heart rate, BP, ect), multimedia ,video, audio ect) (windows based ,ect). Or servers sponsoring advertisements can provide this service for a nominal fee, either with individual security (transparent and encrypted, ect which displays individual views of subscriber assets, or as a mass posting with zoom in clarity on a subscribers particular asset that was made as a personal request to see location (by clicking on) – (all willing responders presently being displayed could be viewed or cleared from the screen by viewer preference).

NOTE: All transmitting devices for 911 protocols such as emergency systems manned or automated, would possess this application level software in their system to process or view all transmitting devices or to activate their FACT public service section to route repeating or digitpeated PFNS in an emergency application. These tracking or telemetry subscriber services functions are preprogrammed with the ESN communication number, PFN SN, ect to be used in a transmission header (transparent digital binary code, ect.) . And also preprogrammed is some form of personal identity check for authorized users of the system and function like PIN numbers, ect, all of which is submitted and programmed at the time of application during the service purchase. This is where the communication command strings are entered to create this PFN network communication and information technology, ideally handled by accountable PFNS, because of remote and systemic redundant memory storage for

catching fraud and hacker criminals. with anti-social immature and irresponsible behavior.

These two above proprietary tracking system were detailed here as a set of product lines that can be accomplished though the web using GPS or wireless Cellular (or RF or Pager) automated triangulation to derive location coordinates. And it is a good initiation set of products for co -development with Motorola or Nextel, ect. to be a part of developing this technology to provide accountable PFNs for personal and machine use world wide for better management of equipment time, environmental resources and the control of waste from the individual to the largest corporations, banks and governments. Kline and Walker LLC will be seeking out Nextel Developers Program in an effort to work collaboratively in this above development. Also many feasibility components are Motorola parts.

FIGURE 4

This drawing shows multi communication systems interfaced, which is one major organizational function of the PFNS. So the drawing incorporates Nextel's present technology and protocols as another Commercial Off The Shelf (COTS) Product for multi – tasking communication in the two different categories of PFNS; Personal or Equipment PFNs. It is not a panacia or optimum multi-communications service for the PFN protocol, but it is a step in the correct direction to offer a organized accountable scanning function for dedicated RF, wireless telephony, and paging systems designed for PFN protocols. Plug, Program and Play consideration will of course be designed into all PFNS to utilize the Nextel system and Kline Walker LLC will seek to construct PFN product and protocols with Nextel and the prior mother Motorola to

provide the PFN convergence scanning devices and system for a multi- communication platform in the PFN along with the FCC (other related government agencies) and standards committees to assign frequencies and protocols for a communication convergence emergency cellular network (a PFN system protocol and part of the TRAC/FACT program functions detailed in earlier related filings). Figure 5b is an earlier patent application figure detailing the convergence of paging radio and telephony wireless in the PFNS.

The top half of the figure details the use of computers, and or TVs as everyday monitoring systems to operate personal tracking in the least expensive manner and to add product to this technologies base systems and grow sophisticated accountable personal PFN for remote management and control. This is done to provide product to all economic levels and systems that can be built on as one has the capability or need to do so.

401 is a home based PC either lap top or desk top model. And 402 is a regular house TV. 401 is connected to an standard land line phone in 413 through an internal computer phone modem and is capable of receiving any telemetry data from a personal PFN GPS tracking along with other data streams though Internet protocols interfaced with varying types of Internet gateways basically Packetized RF, Paging, cellular phones or wireless phones analog or digital systems CMDT and DMDT by operational software products provided by service providers and prepared for Internet protocols (IP). These personal PFN products and personal tracking products will be constructed in conjunction with Nextel , Motorola, Research In Motion LTD and will range from recreational tracking and hobbyist devices on isolated systems to serious

accountable systems connected to intranets and the Internet initially starting with tracking functions but capable of expanding to complete all the functions of a PFN universally constructed to accept all applications. *For these commercial carrier products cost will vary with function and the extent of the system. All the technology is defined within all the related patents. The cost, profit and product pursuits will be determined by market strategy and knowledge of pubic desire for these product offerings.*

412 is a serial RS232 modem that is capable of handling packet identified or binary Data, Hex decimal data ASCII NEMA protocols and or TTL. This 412 modem has the option of being connected to 409 a radio frequency either short or long distance but most generally local unless operated by a licensed amateur radio person using short wave equipment ect bouncing off the ionosphere around the world. These systems

Programmed to digitpeat though an APRS system to connect to an IP Gate way has no limit to sending long distance tracking, either by programmed RF stations or the above Telephony and IP providers however transmission conditions may create reliability constraints in some circumstances.

409 short range tracking (Tot Spot) communication can be obtained inexpensively through another modality for the economically compromised (not owning a computer) through the TV and a game style software program caring the calibrated map library the APRS software along with desired zoom functions retrieving the digital data from the 412 modem connected to the game control input connector. Of course 412 would be connected the same as is done in figure 1 and the short range RF would be

the personal tracking belt would have the same as the protocol and architecture detailed in figure 1 as well as commercial products consolidated in integrated circuits.

The service providers for the two way Pager systems, and wireless phones would use triangulation locating to the known towers and provide the IP hook up through a intranet to area cable providers as a product to sell to cable sub scribers where they would run a software program for the subscribers to view their children on their own home TV or make a request for specific alerts for when their children were past a certain distance from e.g. the house. The cable providers world run this in a mass data management computer and the base technology of tracking an asset on the screen is the same as figure 1. This would also be a service sold to the satellite companies where they are dominant in the market place .

Up-links and requests are possible for Cable Satellite and Web TV to personalize program service even through TV remotes, and phone land line

COMMERCIAL NOTE: Kline and Walker in the development for the personal tracking and PFN remote monitoring, management and control claims sole proprietor ship for any variation of this product. Which is to track a person pet or a piece of equipment though any wireless pager or telephony systems that is interfaced by IP ISDN ISP or any fiber optics phone rooting system or device, microwave light transmission and provided as a cable, **satellite** or web TV product to a subscriber to either the TV server or the phone provider or both this also extends to any machine messaging and or monitoring management data as defined In any to any of the related PFN applications. This also extends to any two way component either involving the

phone systems or the TV systems either as a combined software interface or as hardware connections .

Kline & Walker will seek out all the same phone systems and pager system as well as Direct TV and Media General Cable ect. and the Internet providers AOL, Errols ect. for the computer area. This is one way to allow parent of all economic strata to afford inexpensive device to track their children and pets on their own TV as well as receive other Data streams from their child's life experience, when they are not able to be with them or want to be in the back ground. Ultimately the least expensive will be the two way pagers that are tracked through triangulation from the receiving towers and processed by the paging provider and transmitted to the correct TV provider for the pager subscriber for tracking. Still a new technology in the locating system might keep this cost up presently but it will quickly go down with volume. (Of course as detailed this can be done in all the modalities detailed in this application as well as all the related PFN application.

The software will be written to allow a parent to switch to their family channel on their TV and poll their programmed ESN PFN family units and watch their real-time activities. The tracking and object placement of a specific PFN will be accomplished by the same method involving calibrated maps and building architecture as previously detailed. Split screen application will advantage those that have to monitor the disabled, while viewing regular programing.

Or those that need close guarding. And of course gov. tracking of conditionally released people and animals that need to be sent to involved parties can be sent to those

individuals directly through their own TVs .(Also monitors can view both parties simultaneously)

Returning to figure 4 405 is the belt that is completely detailed in figure 5 406 is the Nextel Radio Phone Pager combination or a radio or a cellular phone 407 is a pager basically two way and 408 is a GPS receiver if this is used for locating the personal tracking system or PFN.

FIGURE 5

This a drawing depicting the many attributes of a personal PFN in the form of a belt , collar harness bracelet, bracket or circular securing device. It is not meant as the only modality or the best modality for carrying out the person or animal PFN set of systems. It is merely employed here to display many of the functions, configurations and uses of this versatile invention. And primarily all personal tracking with accountability and or remote control and management for such an individual device falls within the nature and scope of this invention.

In figure 5 the belt or collar system is displayed in the closed attached position as viewed from the top as if attached to some one or an animal. And it is also displayed as laid out in a lower view. The belt has a lot of accessories and it should be kept in mind that in many cases not all accessories would be used however the design of all PFN systems is to universalize a base system in which inexpensive plug and play accessories can be added to the system as desired. The belt systems components will be constructed to allow for varying bracelet/ belt/collar/harness sizes to use the same electronics.

500 in the belt itself shown in both configurations top and bottom of the page, 501 at the very top is the buckle which will be detailed further as 510 and 511. 502 in the top and bottom vie is a video cam system with audio pickup (Digital or analog -size and cost will determine component) 503 shows a top view of a finger thaw for an individual to place their index finger, ect. into upon an identity request either self generated locally by the personal PFN processor on the belt or as a remote communication request from an accountable monitor management and remote control system (Gov. Police agency, hospital or monitoring medical staff. The finger thaw can also be used to determine pulse rate. Of course the sensors are different and if both functions were used simultaneously different trans mission circuits would be configured if not hardware wired separate functions would be completed by switching components such as IC's microprocessors and firmware preprogrammed. The main PFN processor will be capable of coupling up to a desk top/laptop desk top and have flash memory burned into EPROM's to run different accessories or accommodate change in functions. Of course if this is a security system crucial code keys timed access and pin numbers as well as any number of security measures will be employed to insure only the authorized personnel make any programming alterations. Programming will also be employed to ready the mechanical lock system in 510 to open . This system might require one key with a resistor in it much like the GM vehicles or a card swipe like hotel doors with a magnetic strip or the use of a smart card or chip and reader

or a signal sent remotely or inputted though a restricted connection port on the personal PFN system. All of the technology to construct these modalities is detailed in earlier related patent applications as preventive means to restrict the unauthorized use

and access to equipment PFNS. So these same or similar modalities can be applied by anyone skilled in the art to construct a secure locking mechanism for the mandated belt application. Of course all these systems would be tamper resistant and capable of detecting and initiating an alert mode that can be configured to alert locally and give prerecorded voice message instructions or alert the remote monitoring addresses and they would be capable of sending preprogrammed messages (either from the remote management system or stored locally) or communicate real-time communication instructions from remote operators either audibly or by text message to an LCD if an accessory or part of a component COTS product service for instant message or text messages.(earphone and collar Mic will be also accessories to help the individual wearing the belt with instructions and directions in a discrete manner—e.g. a useful protocol for the recent parolee and mentally or emotionally challenged. Of course 519 will have a panic button to get help from the remote management support system in real-time for the wearer of the belt system.

519 is a sensor array which will have a serial RS232 or comparable protocol more probably a USB system connector(at present), nevertheless, all such possibilities are well documented in the prior related PFN applications. It will connect with a unibus cable system running through the belt labeled 507. 507 will be capable of supporting physical connections in various positions around the belt for accessories and the PFN processor or COTS component processor system will be able to drive the components through burned in software programs installed through a computer with the specific commands that are appropriate for an explicit application. The reason that COTS processors are mentioned here is because as has been detailed through out the PFN

invention for man and machine is the continual consolidation and increased functions of product offerings and the PFN platform is designed to be an accountable organizational interface to perform remote control and management for society. So, it is important to point out that these COTS products and integrated circuits of multitasking devices are all with in the nature and scope of the PFN invention.

NOTE :For this reason Kline and Walker LLC will seek out all these named electronic manufactures and service companies in a cooperative effort to marry up and interface in the most economical fashion and commercially beneficial means for all including the end user. (in other words if there is engineered product that can be obtained through a specific modality preferable to a specific manufacture and their engineering staff that full fills the PFN protocol and any standard for such product application Kline and Walker LLC will cooperate, license and work to enhance and complete these products and systems in as amiable manner as possible for all. The major objective being to organize the PFN system and networks to provide accountable activities and management so badly needed for public safety and the environment , while insuring a good fair and just respect for individual's rights and their privacy. These PFN systems are designed to enable and provide more freedom for life's learning experience, while helping to safe guard public and personal safety through real-time remote management and control when needed. Objective PFN Accountability is the management tool for respect for all.

519 is representative block of many possible sensors e.g., water sensor, breathalyzer, body temperature, radiation or hazardous material detector e.g. the Nose, drug detector, pressure detectors and any measurement transducers that can create a

unique electrical signal (Analog, or digital, current sensing, TTL, or digital Binary ASCII Hex decimal or any special data protocol like (NEMA) to provide data to the PFN processor, 513 which is handled by the software and firmware preprogramming for response locally and systemically through reporting these data streams to any remote location. This process is well documented with many modalities throughout all the Prior PFN related patent applications

501 the digital camera is also detachable and can be held up to the eye to transmit an image of the iris of the eye to allow for system software presently IBM, Lockheed, or flash 21 digital to confirm identity through secure wireless transmissions timed and reported with GPS location coordinates. This has been discussed in earlier related patent applications for equipment PFNS. With processing and memory continually being reduced in size identity software will be running local as firmware burnt in as application specific software in product protocols to complete on location identity checks as well as needed.

504 are contact nodes that can press or conduct through fabric or are provided portholes to make contact with the skin either as sharps or liquid conductant released at the appropriate time to enable a low current of amps and high voltage to disable the wearer of the belt e.g. a Tazer gun function either by a commercial COTS system adapted for this purpose with the trigger mechanism wired to an output function pin of the PFN processor and pulled high or activated to dissipate the short high voltage charge to disable the person or animal. In an other modality this invention would construct this entire system out of a capacitor and relay system with Toshiba driver to operate the relay triggered by the stamp computer or processor(this process already detailed for

other applications. The capacitor is energized from the power pack and re energized automatically each time it is fired or dissipated. **(Of course if this system is employed the wearer would be informed and medically examined to insure that there is no risk for mortal or fatal damage e.g heart attach or seizure in an activation. – This is an extreme measure system and would have strict protocols and rapid response teams accompanying this action.) (The system would be made as impregnable as possible and tamper resistant with alerts accompanying any attempt to deactivate or compromise the system.**

517 is another extreme Personal PFN control measure. It is an automated medicating device in which a sedating dose of medicine is given remotely or locally by the appropriate authorities with much the same response protocols for it's application. Of course the the wearer of the belt would be evaluated for tolerance and effectiveness of the medication used and their general physical condition. On top of 513 the PFN processing and memory unit is another connection point indicated by a dark round oval. This connector is also a multi-pin connector and would support telemetry leads attached to sensors for a heart rate and a blood pressure transducer cuff around the ankle to retrieve blood pressure. These electronic signal would be sent to a remote attending medical staff and recorded in the accountable memory both locally and remotely with audio video location data and time and date markers. The remote management team would monitor the effectiveness of the dose and have a second medication available like adrenelin or steroids to reverse the dose or halt any allergic reaction, while the emergency behavioral response team was in route.

Of course these medications are just an example and medical protocols standards and regulations would have to be set by the appropriate authorities and medical personnel. PACs and automated medication system already exist but this technology has created many remote actuators and anyone skilled in the arts could construct the proper device to complete a successful calibrated injection. The proper dose would be already known and installed in the injection cartridge. If 506 alcohol sensor, the breathalyzer or chemical and or drug sensor flagged positive only minute sedative increments would be possible by the program if a violent state was still in progress, while constantly polling heart rate, blood pressure, and respiration through an elastic sensor on the belt. Or possibly 504 shocking system would be used as an alternative or a guided pepper spray canister or compressed tear gas would be activated from the top of the belt buckle. Any and or all would be available to the remote and local behavioral teams to help save or minimize injury to a victim while regaining control and management for a negative situation involving the conditionally released during re- assimilation or managed freedom into or with society.

Note: Of course this is not being recommended for those that are considered a threat to society e.g. the criminally insane, ect. But those that have marginal social problems substance abuse (intermittent or questionable tendencies toward violence, but are not jailed or found guilty of a crime or are awaiting trial (Bond condition) and can use help, guidance Or those that are going to be released early back into society and or those that know they have a problem and ask for additional help by in watch dog situation .

506 leachate alcohol sensor is placed in the small of the back (lumbar) region and sponge covered to allow perspiration to collect and be sampled for pH and aromatic changes that take place during the consumption of some drugs like alcohol. This sensor another transducer will generate a specific signal back to the Personal PFN computer and resident software program for an appropriate preprogrammed and or remote controlled response or for monitoring and management decisions for the conditionally released as an early warning to a possible at risk situation for the individual and or the public. Coupled with real-time ,time/date and location data from the GPS 514 through 513 the processor and 512 the communication system in use on board the remote management and control behavioral response team can be there at the critical time to give protection and serve all parties. 515 is a power pack to be determined with a solar cell for recharging. However, the solar cell would be connected to a area of the body most likely to be exposed to the sun like the shoulders or head. This is discussed in this application and earlier related applications.

518 is to be a event memory storage for applications that require a larger event storage that is provided in the 513 processor area. These memories storage devices could be flash memory, or Sony Memory Sticks™ or any of the memory technologies detailed in all the related PFN patent applications. Also they are protected for accountability comparisons with redundant off board memory storage.

509 just below the unibus 507 that connects all the components physically and supplies power to all the components is a large black line. It can be seen in the top closed view as well depicted as one continuous line. For the mandatory wearing of this belt when the buckle lock is closed and sealed this line is a continuous connection

through the buckle and impregnated into the PFN computer compartment which is also enclosed in a tamper resistant package with alert systems(local and remote- a topic well covered-because it is the same application specific protection for all essential components as detailed for all PFNs to be of practical service to be accountable systems) Here 509 caries a special signal generated at one end of the line on a out put pin from the 513 processor and received on an input pin on the other end of the line and the pins reverse their function from input to output by a running program in the processor that also measures the resistance or current levels to detect if anyone has interrupted it or attempted to jumper any connection. Many random signal oscillating firmware programs could be utilized and this is just one modality to insure that the secured belt is not tampered with . Of course any such tampering would set off a flag in the tamper program and all alerts would be activated. 515 power exchange for recharging is accomplished by recharge able batteries at home and an emergency power source enclosed in the protected processor part. This emergency power system will be capable of powering all essentials as determined by application specific protocols. With all the detail in all the related applications anyone in the art can design an appropriate power circuit for the application. Once again 510 will be a physical locking system as well as an electrical system and will also use many of the same physical and electronic circuits for locking applications as have been detailed previously . These systems ma be pined and riveted or secured like police manacle locks and chains with harden steel. There is no limit to the best way to achieve a secure system. And all of are within the nature and scope of the invention.

The basic focus of the belt system thus far has been for incarceration or early release or mentally or emotionally compromised with social disabilities. This belt system or any of the personal PFNS or tracking system have great purposes for just about everyone. It is important to remember that not only are there different modalities to perform tracking and accountable management and remote control for personal PFNs but there are varying degrees of product that can be bought in sections at different times and interfaced through different communication paths for all kind of needs and reasons at different times in a persons life. This is one of the major goals in developing the personal PFN structure with the many manufactures and service providers and to develop a universal plug and play system that can have software burned into it at anytime for different purposes. The Federal Access and Control Technology FACT is well documented as an intricate part to the PFN technology and will not be detailed here , but through the PFN organizational system of accountability PFNs can be configured in anyway for most any purpose. not just used in this belt configuration

Additional Sensing harness or apparel to be worn.

Just like the collar or belt system the under harness or wearing apparel will have wiring and sensors that can provide physical telemetry back to a PFN system for processing , recording and reporting to the proper support staff. The system will be able to support automated medicine application systems through secure communication links that require close monitoring while giving real time data as to how the patient is reacting to the prescribed and administered medicinal therapy. Conformation of all orders and telemetry will provide accountability both locally and remotely. These systems can also be used to monitor individuals found to have legal social problems due to substance

abuse to help manage and control dangerous human behavioral situations where there is a clear legally acknowledged and confirmed problem recognized by all parties, society and the individual and the use of this system is a condition for increased social freedom with legal and qualified monitoring control and management staff available in real time to all parties at risk. This is not proposed for those found to have uncontrollable violence problems and the use of the system would have to be closely planned regulated and watch dogged by legislators, the justice department and civil liberties.

This system could also serve well for the mentally incompetent

From the second PCT patent many personal PFN product offerings are discussed and this section is being quoted here to merely display the early variations and configurations of the PFNs and that the Belt configuration in figure 5 is merely just one such product offering.

PERSONAL PFNS FROM PRIOR FILINGS

MODULAR COMPONENT INTERFACE PRODUCTS

Another configuration could take the form and still function as a small carrying case (like an entire brief case or woman's purse) which would hold a persons desired electronic device array (a mobile office, etc.). This entire case would have a connector (USB) probably on the case or an IR communication port so that it would either jack right into the vehicle secure box or optically communicate with the interface system either where a space was provided for it internally or connected to the connection array bus or (USB) on the front of the secure compartment. And this way the owner could use the interfaced case, charge its components or individual devices and, if so desired, protect it in transit or when s\he was out of his\her car.

There are many manufacturers creating mobile offices out of brief cases that have cell phones, modems, laptops and G.P.S. system for the business man to use on the road , but none that report back location per/se. Ideally these personally carried component systems would be stored and used in the tradition and protection of the

invention's secure containment system because of the high cost of the devices. Some existing briefcase products do have chargers but they are not interfaced with the automobile's TTl, analogue or digital logic control system. This is a great benefit to the consumer with this personally owned and operated vehicle diagnostics system and interface. S/he immediately has accountability for any actions taken in the repair of their vehicle and they can have direct contact with any service provider, who can look at the same data give advice and prices or dispute another service providers diagnosis and pricing.

Basically this was taken out of the earlier PCT patent application to show personal PFNs as mobile offices and their ability to interface with the machine messaging PFNs to provide diagnostic functions. The main point being that personal locating devices that report their location to an other location and different forms of personal PFNs that perform accountable remote management and control are all with in the nature and scope of the PFN invention no matter the configuration.

FIGURE 5a

FIGURE 22 This is another prior configuration of a Personal PFN fro an earlier filing

It is a product to keep track of provisionally released parolees. The numbers in this figure still appear with figure 22 numbers. The illustration will be changed and the text edited accordingly in the formal filing.

Track a Con.COM This system would allow for parolees to be back in society while their movements and activities were monitored and governed by an automated computer system that would track physical movement through GPS, or LoJack or Cellular and or RF triangulation on a personally carried device that monitors body temperature, pulse rate and provide for positive Identification e.g. Finger Print or eye iris evaluation

The device would be controlled by the master controller and support local Web page access and hyper-link capability. Tactile and galvanic sensors would be capable of detecting chemical changes in perspiration and determine the chemical equivalent for a specific person drinking and provide a specific electrical signal that is transmitted back to the parole center for a con beep and direction to either report in or take a skin prick check or a breathalyzer. Locations of area liquor dispensing or known drug activities would be plugged in as trail markers on the GPS calibrated maps and flag a convicts questionable activities at these locations or ask for the above checks.

Prior victims of crimes that an Ex-con is convicted of will be notified via a web site and early alert notification program or system called TRACK A CON.COM and or Track A Con. Gov (or any other similar name or.Com for this purpose is here by claimed and reserved). This program will give a reasonable distance to stay away from,(procedures and program parameters to be determined by the appropriate authorities) weather it is prior victims, victim types,(children, ect) or just trouble areas for a particular parolee including other old friends (other criminal types) or geographic areas that can be tracked and or trail marked in reference to the parolees known movements, and or others in real time. Once again the appropriate trail markers will be posted as GPS, ECT. Geographic coordinates and will notify authorities and victims of flagged improper movements in real time. The convict will be alerted as will and warned to report in and move out of that area. Also, the victims can be outfitted with a mobile page and or Track system and warned directly of a past ex-cons close proximity as law enforcement is detached to protect and serve the victims safety first as a 911 response. Additionally the victim and community can track the parolee on the system by

contacting the web pages and or a tranquil audio sound or message status can be given to a victims pager, phone radio and computer system to assure the victim of the known location of the Parolee. Special situations like school officials and security staff could be paged phone called or given a red Icon on a IP connected monitor or TV server (cable or satellite as detailed in this application) The alert would be given because all schools are trail markers in the program for this particular criminals parole .(A past petafile, ect). On the school monitor or in the phone page or text message photo and descriptions would detail the parolee in the area. The alert would be given to the parolee as well if this is determined the proper procedure by the experts and authorities. Ideally a behavioral and medical response team would be dispatched to both parties along with law enforcement and parole officials. This unique and powerful public service tool can be provided less expensively, because it is dispatched in a specific strategic manner by operational protocol to be determined by the appropriate authorities specialists with constitutional and public acceptability. Commercial products can be provided as elements of this Public service tool. This will involve Insurance for all parties and governmental risk management. Bail and bonding insurance for the parolees and advocates (family or general public or governmental early release programs to reduce cost of hard confinement incarceration.)

Note: this has been detailed for possible violent criminals for controlled release into society as a tool to help evaluate if corrected behavior can be practiced and has been learned during the punishment phase earlier. It is also meant as an accountable communicative tool to aid a released parolee with adapting to a lawful way of life by recognizing the inevitable difficulties in re acclamation in society. This same technical

system can be utilized for any situation where people or animals require close observation as a public or individual recognized public safety threat. This is not a pana cia but merely a state of the art tool that can cost effectively be interfaced into society's legal structures to increase safety while better spending it's resources. There is no claim of perfection here and it requires the best out of all to perform correctly and constitutionally . Ideally the PFN's inherent accountability through local and remote event storage can help to insure evaluation and reevaluation of use and performance of all parties to help insure an optimum use. This should yield cost savings for the public and increased public safety by lessening incarceration time and help to decrease antisocial behavior developed with long time exposure to other criminals warehoused in confinement, rather than being closely guided and aided in near normal life conditions.

Earlier in this description the word automated was used . That is not to imply that this system of monitoring and remote control and management in unmanned. There is a monitoring staff of counselors, medical staff and law enforcement both in the remote monitoring centers and on the street at any interdiction.

FIGURE 5b

Is the a drawing from a prior patent application detailing a universal PFN with Cellular Pager and Radio frequency communication service . This figure also shows the service providers and many of the applications for the equipment PFNs . For this Personal PFN provisional application **FIGURE 18** from PCT will have it's items labeled with 18 numbers and this will be changed for the formal application. None of the technical content will change , however in the formal filing this drawing will show

that these communication service providers lists will be all able to support this technology's personal tracking devices and PFNs

This figure depicts a universal PFN system with some usual device applications and varied hardware hook ups to communicate with the remote locations and physically perform the Accountable Remote and Automated Control for society and it's institutions. The bold black line with universal PFN enclosed is to indicate that this is a protected area not just physically but legally. In the enclosure 1901 is a commercial off the shelf COTS cellular phone. It shows one wireless communication modality through a PCMCIA modem connection to the processor and internal TRAC\FACT software. In this application all the software is commercial off the shelf supplied by the cellular phone company and or the PCMCIA modem card interface. Obviously this preprogrammed software would be down loaded and the appropriate dial out phone numbers installed in the command string. These would be for commercial servers and or public providers as illustrated by the little man at the computer 300C, 300 L and the whole 300 networking system.

Below the PCMCIA connection block is the block called Complete Card. This is a desired modality for cellular phone use in the invention. It employs a commercial off the shelf COTS product a PCMCIA Complete Card TM. The complete card also supplys its own software and hooks up in the same manner as a PCMCIA standard modem card. However this system also incorporates the Cellular phone system and antenna. The appropriate hardware is known in the industry and the appropriate configurations can be accomplished by anyone skilled in the art to link up the euro100 boards with the PCMCIA connections. The bottom box is modem and can be part of the top box PCMCIA connection when used with telephony or with any application from the lower box 1908.

Number 1908 box shows all the different types of communication devices employed in the PFN's. 1 way Radio, 2way radio.1 way paging, 2way paging, light or sound and GPS or locating systems. These different communication devices are well covered in the in figures 3,4,5, and 6 and will not be revisited at this time. However, as this drawing illustrates they would process their data streams through the modem and on into the processor to be handled by the TRAC/ FACT/CEW programs ect. The modem would be capable of converting the applicable data steam and communication source to be used by the PFN processors. In this same block light and sound as well as any other electromagnetic wave that can be used to transmit wireless or hard wired to a converter or modem to deliver control signals to the PFN system are hereby included by reference as another modality of communication. In earlier related patent applications traffic control devices were described for authorized personnel to control in real-time a particular vehicle by pointing such a tool to a specific target vehicles receiving plate and to control a slow guide stop and secure sequence for a suspect vehicle.

1907 is the uni-Buss connector that has also been discussed earlier. However, ideally an accepted industry standard will provide a universal plug and play capability and the TRAC/FACT software and TRACS management system will insure accountability and real-time control as needed. All possible present connectable hardware was detailed in the related application docket No. 112756-202. However as stated before the plug and play capability for power, control signal is part of this technology as described in figure 6a as natural evolution of this invention. whether it is for a mobile application (car) and or a stationary devices the control power and signals to the processor can basically use the same kind of plug and play Buss. 1903 is the mini-computer containing the TRAC/FACT programs. The round circle is for the CEW program Commercial Encryption on the WEB . This software program is provided by the credit card companies and will have a special modem capability and handle 128/64 bit.1902 is a card swipe or reader that is connected to the processor either through the

uni-buss or the old R232,TTL, or PS2 type of connections. These three are shown here as the present standard connectable modalities known to present industry. However the un-Buss connector would be a more ideal modality for space greater data flow, and efficiency. These old standard connections are shown to be available to other components interfaced in the PFN and can be employed to give forward and backward engineering versatility. These would be limited in number as time went on and would have separate software command strings, with the appropriate drivers to access this different Com. Port and coupled device to complete the interface with the PFN. The device would still have to have an electronic FACT ESN or identity system or would require special registration to be interfaced. 1902 the credit card reader would be able to handle commercial credit cards and driver licenses and FACT SYSTEM identity cards.

1905 is the hard drive on going memory storage. For size reasons in this drawing the FACT application specific event memory is not shown but it is a redundant memory to the continuing running on the hard drive. The event recordings are controlled either automatically by resident PFN programs, remotely activated and controlled by an authorized external source (Logged command string) or by the resident operator or occupant. In any event all machine and man actions and interactions are recorded and logged in the FACT Memory preserved in the protected restricted access area as depicted and detailed in figure 2C , 2F and 2G.

1909 is a big dotted line which is the unibus going out of the PFN and going to activity controls video cameras (or Digital) microphones and activity sensors as well as generic host control connections. Some of these sensitive control and sensor leads will be provided PFN protection special and or utilize the host vehicles strongest architectural structure (e.g. the frame) to protect these critical transmission lines. This should be determined application specific and as part of a standards effort. I have gone though a great deal of effort to detail all the properties and qualities and give modality examples to provide a standards effort a good clear organizational system structure and

electrical interface platform to provide Accountable aggressive remote and automated control for society and it's institutions.

300C in figure 19 is the commercial server who can be any gateway node the customer picks or can be a service provider for the OEM host equipment or an energy provider or a bank card provider or a communication company or any type or number of these commercial servers. However they must be licensed and provide enough mass storage to handle all critical TRACS/FACT data to operate in any geographic area. They also have to be able to handle it in a secure accountable manner. For simplicity purposes the 300C have been placed at the bottom of the 3 basic different types of present wireless communication. To the right cellular phone system ,to the lower left of figure 19 is the present one and two way paging systems and for the lower right is the Radio frequency systems. All of these systems connected to land lines (fiber-optics, ISDN, ect) to perform any hardwired Database connections they are computer operated and act ac gateways to isolated computer networks and can provide web access on the Internet. (if need be encrypted). A sample of the types of commercial businesses that would utilize each type of communication technology has been listed under their respective areas. This is in no way intended to represent all the possible commercial uses as the PFN will ultimately be on every piece of equipment.

In the middle right the rest of the 300 system is illustrated by the large computer stations manned. The one with L.G.A.&C. SYS. Stands for Local Government, Access & Control system. And the one labeled N.G.A.& C. SYS. Stands for National Government Access & Control System. In all communication areas and in the extreme lower right hand corner is satellite and a satellite dish connected to land base phone lines. This is to show that the national registry can provide complete critical TRACS control and FACT data to it's entire geographic area and is also capable of

transferring Data internationally at the proper authorities desecration. Some of the proper government agencies are also listed but all government agencies could access and create data as could even the general citizenry for total accountability. of course specific data on individuals would not be obtainable or used unless authorized by the individual or as the result of some legal action as is the present case. Any such misuse or access would be reported to the individual and alert the authorities and the person violating a persons individual privacy would be criminally charged and subject to civil action as would any agency or commercial storage area. This means total accountability. This system has been designed to respect individual privacy. Which means that the individual has to release any licensed storage facility public or private no mater if they provide the service free of charge or not. However, Gross non descriptive data can be sold and discriminated as long as an individual can not be identified or compromised in life the pocket and the pursuit of happiness. The exceptions to this rule is that if through the course of operation a piece of machinery they endanger others (public Safety) then the proper authorities and commercial insurance agencies can access these personal records. However an individual can give permission electronically in real-time if so desired with a signature of a PIN number for consent or a verbal voice recognition or the fingerprint steering wheel, video snap shot, or a signature on an electronic pad or the iris reader and voice recognition or any combination of the above. Free service can be provided and personal data can be acquired and used if this is agreeable to the individual

Statement: This details equipment PFNS and also how they can be used with people. All the modalities are using the same belt system to depict the

personal tracking and PFN accountable telemetry remote management and control personal product offerings. At the end of the figure descriptions there will be some product break outs and names for the personal PFN commercial development and focus of this application. However, this is not all the products variations and configurations nor is it all the names the products will be marketed under.

Another application involves Cellular telephone communication. This system can employ the same collars belts and bracelets but they will transmit the location data via the cellular phone system. In some incidences these will be closed systems and in other cases they will be open to public access. Cost will be defrayed by commercial advertising supporting the network tracking software and providing security software protocols for the general public to use the two way paging system will also employ the same kind of belts and bracelets—and utilize 2way paging to communicate packets of GPS NEMA protocol data to specific Email address where subscribers or commercial advertisers operate a web site with the soft ware to provide secure individual tracking for a commercial operation-----While for the most part these systems will utilize some form of GPS NEMA protocol for obtaining tracking data and transmitting it to another remote location , this technology also plans to utilize cellular triangulation for both cellular phones and pager systems to improve indoor tracking by basing the triangulated data from powerful local transceivers with fixed positional grids and running a triangulated algorithm to provide more exact and continuous locating ability.

Note : The TRAC/ FACT program and system mentioned in this last figure will be in more detail in the formal application and is already incorporated in this application

as it is detailed in all the prior PFN applications . TRAC means Trusted Remote Activity Controller and FACT means Federal Access Control Technology. These are the corner stones for providing accountable remote management and control for society and it's institutions both in equipment PFNs and in these Personal PFNs

Figure 6

This figure is a product list and a check list of suggested modes to carry out any particular product offering.

Keeping this in mind any combination of technologies and modalities covered here and in all the related PFN Applications are possible modalities to construct product offerings as determined by any licensing

Agreements created to commercialize and exploit these PFN patents and product offerings; also the product names here are considered proprietary in every venue and market including any WWW or Internet

Address, or web page or listing or search engine.

NOTE: specific names set aside for the radio repeater or digipeater technology are as follows-

''TOT SPOT", "HUNT WELL," "PET POINTER", FRIEND FINDER,"this is not to say that other PFN technology like pager or wireless telephony may not create products bearing this name, but it will be solely reliant on the discretion of the licensing authority of Kline and Walker LLC.

NOTE: The Paging and Celluar phone technologies have **"FAMILY FINDER", "SKI SEARCHER", and "PATIENT PAL", TRAC A CON(EITHER . COM OR . GOV OR LOCAL POLICE AUTHORITY.** Once again these names may

use any of the technologies detailed in this application or any of the related patent application, at the discretion of the licensing authority of Kline and Walker LLC . The rest of figure six is a list of areas to create market product and names from listing Activity controls ,sensor systems, and functions.

Short Description

TOT SPOT ---is a tracking device to a send a child's geographic position to a computer screen organizers palm tops (with wired and wireless modems) or a TV using any of the modalities detailed in the PFN technology through out this application and the related filings

HUNT WELL—is a location system that provides map placement on a hand held wireless LCD communicator screen of no shoot trail markers e.g. (locations of other hunters wearing or carrying location equipment and supporting a beacon, houses or farms, supporting a trail marker beacon that appear on the screen, before shooting. This system and the complete product construction may use any of the modalities in the PFN technology to provide many different qualities and properties to this product. People can see hunters in area and hunters can see all beacon PFNS or locating transmitting devices (FCC and Tobacco and Fire arms should set special Frequency for this application and PFN beacon transmitters should be supplied to schools, public gathering places ect. roads and known populated areas by the fish and game people in all the states) These systems could uses solar cells and wind generators to provide powered where land lines or batteries will not be a total solution)

PET POINTER – Of course can be used with other animals (application specific attachments to the animal a consideration of course) But is basically a way to

track pets on a computer or TV screen or palm top or GPS or Cellular Phone or pager system if they support a display and a map program any are capable of receiving another's device location transmission signal, through any of the modalities detailed in the PFN technology and these devices are all considered to fall with in the nature and scope of the invention (personal PFN and tracking devices)

FRIEND FINDER or FAMILY FINDER or PEOPLE LOCATOR are all

Personal tracking devices to track people through any of the technologies many variations detailed for the PFN systems . They may be belt systems , purses, brief cases, concealed in personal valuables that normally accompany the person. These name are being applied to locating system for this purpose. Other names like

LOST AND FINDER or BREAD CRUM BOX or CRIME TRAIL BOX or THEIF CATCHER KIT

Are reserved for personal possessions that are placed in to a lockable container that will give it's location remotely once stolen either activated automatically or by the owner or the police. The systems used here can also be any of the PFN modalities to be determined by practicality . It might just as well be a secluded apparatus that is hidden in a valuable or camouflaged. (These systems can be outfitted with accountable recording equipment all part of this technology's PFN systems

TRAC A CON . COM OR GOV this system can use the any of the technologies detailed in the PFN technologies but is a operated in conjunction with law enforcement and has a protocol involving medical expertise, behavior expertise and law enforcement expertise as well as educators and counseling for the public and the parolee

sor conditionally released. RF systems used for this purpose might well include companies like Lojack and there RF systems.

SKI SEARCHER OR (SKI SEEKER) OR HITCH HIKER OR CAMP TRACKER

This system may also use any of the modalities in these PFN applications and it basically is a way to track skiers on the slopes or cross country and for them to call for help from the ski patrol operators of the ski lodge or the authorities. Can be a limited range and a system operated by the lodge or tracked by the lodge's monitoring system and personally owned transmitting systems (personal tracking and PFNS)using commercial communication providers that are IP linked or phone linked to the ski lodge. Ski patrol location system monitors all incoming sources and places ESN objects on the map as skiers. (software program monitoring all modalities of transmission can be used for other applications as well) converged is accomplished by a multitasking communication operating software program in the monitoring computer at the e.g. lodge or ski patrol headquarters and using the computers Com Ports for RF and IP phone connections for pager and phone or even monitoring through a TV cable or Satellite provider. (Satellite and Wireless systems will prove more reliable with severe weather considerations)

SWIM SEARCHER OR (SWIM SEEKER)

This is a tracking system that is water proof – All PFNs are to be in protective containment but this application is of course made water proof, also the power section has a solar cell so that when the swimmer has to float the solar cell can be

exposed to the sun to recharge the power source. These systems are made water dynamic or stream line and can use any of the modalities.

PASSENGER POINTER or BOAT BUDDY

This system will be placed in seat cushions life preservers or given to passengers onboard boats, buses, subways, trams, trains and planes to be attached to their person as a beacon to rescuers in the event of a mishap in travel. The system is normally inactive and can be activated automatically or by rescuers or the individual carrier—(protocols to determine best procedures FAA NTSB DOT) (FAA is not going to want transmission in flight. (FAA and FCC will determine frequencies used so as not to compete with black box signal in air travel or accountable PFNs on board)

PATIENT PAL or HEALTH WATCH

This system and accessory arrays track physical location time and date of application specific commands provides an interface platform of monitoring equipment, for remote telemetry and activity controls for medication actuators aggressive remote control, while providing Accountability systems including audio and video, ect as well as a record of command received prescribed therapy in two locations at least. Also a special automated 911 message can be individually programmed by medical experts or real-time voice communication can take place for the mentally lucid. All the systems are augment incrementally for patient condition and accessories are prescribed as needed.

STATEMENT BY INVENTOR AND ASSIGNEES

These product names and descriptions are listed as first products to market as envisioned by the inventor Richard C Walker. The names are considered proprietary by

Kline and Walker LLC. Once again they are not all the areas this technology can be applied to, to create product nor are all the possible products named here or listed .

Claims

The next pages of claims are from prior patent applications . They claim a personal tracking device and PFN device and system both to act as a relay station for repeater functions and also as a stand alone personal PFN. The first prior claim page is also numbered P.119 in the boarder and accompanied with the US application number on the left # WO99/36297 and world PCT number on the right PCT/US99/00919. Because it is taken directly from this earlier filing. The claims are numbered 39 through 42 and are the Personal PFN claims. There are 49 claims in this earlier filling with all 49 through the initial PCT review. The other claims refer to specifics in equipment PFNs, machine messaging systems, environmental telemetry and various other innovations.

The following page of claims is from another earlier PFN application and are included here to define the personal PFN and some of it's security applications, This claim is numbered 13. The present new claims submitted with this application have been drawn up from these initial claims so that this patent application clearly delineates the personal PFNs and tracking products through out the prior applications of types of PFNS to commercialize these products as belonging to one area. This method of exploiting the

Properties of both types of PFN technology provide the best avenue for law rules and regulations to be written by the officials and government agencies and applied to the

Page Insert 72A 112756-700

EARLIER CLAIMS.

39. A real-time vehicle or equipment management system according to claim 20, 22 or 23, wherein at least one of the plurality of external devices includes at least one real-time tracking device comprised of at least one of a two way pager system, a two-way processor, a two-way transceiver, the real-time tracking device is interfaced with at least one of a global positioning system or integrated circuit chip set which receives and provides location data upon request via at least one of a phone page and a message to a predetermined electronic mail address on the Internet, the at least one of a global positioning system or integrated circuit chip set providing the location data to the Internet as part of a preprogrammed tracking and monitoring function for at least one of a person, a pet, and a movable or stationary object, optionally protected via at least one of a belt, harness, collar, band, bracket and mount.

40. A real-time vehicle or equipment management system according to claim 20, 22 or 23, wherein at least one of the plurality of external devices includes at least one short range radio frequency equipment coupled to at least one locating system which sends a location signal, and which receives, records any specialized message via at least one of a longer range local primary focal node radio frequency signal, a two way pager system, a cellular phone system coupled to an application specific equipped gateway provider to access the Internet and to provide electronic mail service to a predetermined electronic mail address or world wide web site addresses for tracking and monitoring

41. A real-time vehicle or equipment management system according to claim 20, 22 or 23, wherein at least one of the plurality of external devices includes a short range transceiver mounted on at least one of a belt and harness which sends a standard short range distress signal when activated at least one of remotely and by application specific preprogrammed criteria

42. A real-time vehicle or equipment management system according to claim 20, 22 or 23, wherein at least one of the plurality of external devices includes at least one of a cordless telephone and a cordless telephone device transceiver to be used as a short range communication link for data transfer and to perform at least one of accountable aggressive remote control, monitoring, and management functions requiring short range limited signal scenarios.

uses of the PFNs. The division here is clearly meant to be man and machine. Basically, what is biologically life and what is inanimate in general as far as PFN applications.

13) An independent claim is made for a personally worn PFN tracking devices that can be worn by an individual and report their location to at least one web address through a public server gateway node, or publicly owned provider node using any type of wireless communication system,

an additional claim is made for the networking use of any multi-communication capable PFN to relay or repeat shorter range signals for personally worn PFN devices that provide location telemetry and physical telemetry and can perform accountable remote control , useful functions to include tracking of criminals, monitoring, minors,

What is additionally claimed presently:

1. A claim is made for a personally worn PFN or carried tracking device that is connected and operating with at least one of a RF transceiver/transmitter, Pager transceiver/transmitter Cellular phone transceiver/transmitter or any arbitrary wireless transceiver /transmitter either digital or analog that reports location telemetry in real-time to at least one remote location equipped with at least one of an IP, phone connection or Internet web address connection computer, and monitor or at least one of

a RF provider pager provider, or a provider of Telephony (wireless Phones) connectable interface to a TV system of at least one of a TV cable or satellite TV provider with IP interfaced TV software system and local device firmware to;

follow the PFN or tracking device on a calibrated map program and display a unique identity marker e.g. for the transmitting device's (ESN) or encoded digital ID,

present in real-time, data application specific(e.g. physical telemetry) of at least a person, animal or arbitrary object affixed with the PFN or tracking device,

present in real time audio data, video data or any arbitrary data as may be determined by application specific criterion in the construction and purpose of any personal PFN or tracking device,

2. According to Claim 1 a further claim is made for a protective restrictive attachment system which may be provided determined by application specific needs for any PFN or tracking device and fixed to a person, pet or arbitrary object in such a manner to require unique mechanical and electrical codes or means to satisfy the locking and control system, so that only an authorized person determined by protocol will have access to remove the attachment system, belt, collar, bracelet, clasp, binding, clothing , or open any brief case, purse, box, container to deactivate or alter such equipped PFNs or Tracking devices running program;

further, any tampering and or removal of the protective restrictive attachment system, or depression of a coded panic button sequence

results in the immediate activation or alert sequence in the PFN or tracking device's running program to provide geographic position time of occurrence and any application specific telemetry, and also,

operates any preprogrammed alert flagged activity controls or accessories including,

any event memory storage either local or remote responsive in the system, alerts or notifies electronically (through wired or wireless) a preprogrammed protocols determined by emergency response personnel, who have numerous connectable assets to activate as application specific settings in the universal PFN system

3. A further claim is made according to claims 1 and 2 for a personal PFN or tracking device be constructed in a manner (application specific) that creates difficulty in recognizing the device or to detect it's presence so that only authorized individuals can locate it and or access the device physically, it's data as well as it's controls.

4. A further claim according to claims 1, 2, 3, is made for personal PFNs or tracking device's to be constructed application specific with accessories for airplane occupants, boating occupants, land vehicle occupants to be used in rescue and recovery operations,

5. A further claim according to 1, 2, 3, is made for personal PFNs or tracking device's to be constructed application specific with accessories for activities including;

Skiing (snow and water) swimming, hiking, jogging, biking, camping, golfing, exposed motorized vehicle use, all terrain vehicles, spilunking, caving, mountain climbing, sky diving, gliding, ballooning, traveling, touring, site seeing, schooling, employment jobs, family use, group use, military use, government use, correctional system use, automated health care use (mentally and physically compromised), for security use, for real time census or people accounting applications (natural disasters martial law scenarios e.g. earthquake areas severe weather approaching , hostel war zones for infectious decease control crowd control e.g. conditionally released youth offenders (timely community supervision and intervention for positive gang management and control), public gatherings and counting populous (without PFN/ESN IDs) however, for crowd control in riots or marshal law and accompanied by an accountable judicial public order part of a constitutionally approved process (PFN/ESN IDs available) for rough service use , medium service use, light duty use, for any arbitrary use with any arbitrary application specific accessories with any arbitrary connectable interface to any arbitrary device or system.

6. A further claim is made according to claims 1, 2, 3, to construct a PFN for any arbitrary application specific purpose on any configuration with or with out any or all the specified components, attributes qualities, properties or accessories within all the PFN claims and specifications in all the related PFN patent applications on file.

7. A further claim is made according to 1, 2, 3 to incorporate any COTS product that combines or interfaces PFN components as a PFN component and the predicted

consolidation and integration process as detailed in PFN specifications in this application and all related PFN applications

8. A further claim is made according to 1, 2, 3 to use at least one of a locating system or device or both in conjunction with at least one of the detailed communication systems and up to an indefinite number of them connectable to any of the accountable memory storage system to an indefinite number of them solely connectable to one remote location to use of any number of network connections as decribed in the specification of all related PFN applications.

9. A claim is made for personal PFN or tracking device to provide a Trusted Remote Activity Controller and accountability of functions either in a closed intranet or generally on the Internet or as part of the Federal Activity Control Technology FACT as defined and detailed in related PFN filings to incorporate a use through a national registry,

10. All prior claims through out all he PFN applications apply to these personal PFNs and tracking devices

11. A further claim is made for the creation of any standard, code, rule, regulation, or law governing the use, construction, accessories, all implementations, programs and protocols eit her in general or application specific for any such device that performs personal tracking, or PFN functions as discribed to be found precipitous of this technology and thus proprietary in nature and scope to this invention.

12. A claim is made for an arbitrary power pack or energizing system that as application specific for any Personal PFN or tracking device derived from any and all of the related PFN patent applications specifications.

13.According to claim 12 is a solar cell power array charging system either place on a hat or as shoulder pads that regulates it's charge to the power supply by sensing temperature of Batteries of the PFN invention or any mobile and or remote electrical device and battery power pack requiring a wireless charging source.

14. According to claims 12, and 13 an additional claim is made for a human battery created by using two contrasting metals that when surgically implanted in the body creates potenial difference or a current gradient and electron flow in a circuit when connecting the two to provide charging power or energy to perform work.

15. A claim is made according 12, 13, and 14, to use both the body battery and the solar charging to maintenance charge a holding battery in a personal device requiring long battery life.

16. A Claim is made for the use of a location system or device in a personal PFN or personal tracking device for any form of wireless triangulation performed with RF equipment, wireless pagers, telephony,or locating systems like Lorand, Lojack devices or GPS, dead reconing, or gyroscope systems along with any system software and algorithm that either develops it's position data from the transmission signal it self or from another device's data modulated on that signal and employing system software and or device software or firmware to process the signal and recover that data in at least

one remote location and present the recovered data on a TV or TV system or Computer and monitor, lap top. organizer display, palm top display, hand held GPS system , pager device or system cellular phone device analog or digital or Radio frequency device or system

17. A claim is made for any tracking according to claim 1, 2 ,3 and 16 using at least one of a pager, or wireless device serviced by a phone provider responsively attached to a locating device or system that provides location data that is transmitted to commercial TV System provider so that an individual subscriber of cable, Satellite or web TV is provided a tracking service product, through the TV system providers software and individual control box software or firmware identifying the individual subscriber address to run the program through the ESNs or SNs or PFNs submitted in preprogramming for any personal PFN or tracking system, so with these individual means to identify their transmitting assets for their personal viewing and that data will appear transparent and secure in the IP service and TV software till received on the specific home TV through the TV control box, or web box, which will be running end user application level software for a private personal tracking service, which should require PIN or ID protocol through the remote as well as ESN of TV control box ect, along with the appropriate position of lock on or off function control on the remote tracking device or PFN before providing on home TV location data or other telemetry from the remote device. This system should provide minimal cost, with volume and time on the market.

18. A further claim is made according to claims 17, 19 for any personal tracking or telemetry data stream that is conducted though connectable components e.g. land wired TV cable (coaxial , ect.) land line telephone system (ISDN fiber optics, IP routing devices ect) wireless Radio frequency, or Paging technology and protocols or cellular telephony analog or digital Satellite phone or Satellite TV systems (Microwave ect.) and is responsive to one or two way communications or commands to provide personal telemetry and tracking products through TV systems , personal computers, lap tops, palm tops, organizer products, cellular phone system products, hand held pagers, hand held tracking devices, mobile office system products with or without accountability or protective enclosures or a mobile power supply, or a permanent power supply, as well as any or none of the claimed arbitrary attributes of a Primary Focal Node PFN either personal or equipment in type.

19. A separate claim is made for an automated triangulation software package, that is provided distance and directional data with every signal received by a tower so that an algorithm in the receiving software package triangulates at least a two dimensional geographic position of the transmitting device by comparing system data retrieved from all receiving towers , additionally this formulated location data is encoded in what ever transmission protocol is being employed and transmitted with the transmitting devices ESN or identity SN to at least one remote location to be used for the purpose of tracking the transmitting asset and any movement.

ABSTRACT

This invention is a more detailed development of the Primary Focal Node or PFN as it is applied to individual assets and personal use. The personal PFN in this application is still an accountable remote control interface device of wireless communication technologies, processors, activity controls, and local and remote memory storage. In it's simplest configuration it performs accountable tracking of the person wearing the PFN and reports that data back to at least one remote location However in other versions this personal PFN has all the accountable management and control capability (application specific as the equipment PFNs that make up the machine messaging net work. But in this application special consideration is given to size, security, protection, concealment, as well as, common use and functionality. From the first application detailing the Stop and Control box, the PFN invention with in it's nature and scope has always been presented as a organizational electrical interface platform to perform accountable remote and automated functions in a legally acceptable and civilly responsible manner for society and it's institutions.

Basically this innovation is a personally worn or carried device that provides remote tracking, and accessory activity controls. It also creates a redundant record of application specific data locally as well as reports it to at least one remote location. This application will detail four distinct technical pathways to achieve this innovation, and also detail management and control systems that are intranets and or part of the Internet, which in part involves the PFN/TRAC system detailed in earlier related patents. The four technical modalities are governed by the types of communication systems used to make these personal PFN's.

The first is short range radio frequency systems and GPS for local tracking (limited by the horizon) unless they have their signals repeated through any PFN net work system and or public or privately owned digi-peaters (as an emergency repeating

function) to provide emergency long range tracking to these otherwise limited systems. The second modality involves two way paging and GPS and or the latest cellular triangulation locating systems. The third modality involves standard cellular systems either analog or digital with GPS or using these newer locating systems of cellular triangulation . The forth modality involves satellite, radio and wireless phone systems. These are the basic four areas that will be detailed in this application but all of these systems will be designed to have interface capability within the PFN/ TRAC system at some level, either in an individual PFN or through IP gateways (privately set up or publicly and commercially setup or provided by non profit or government agencies or programs.

PTO/SB/09 (12-97)
Approved for use through 9/30/00. OMB 0651-0031
Patent and Trademark Office; U S DEPARTMENT OF COMMERCE
Under the Paperwork Reduction Act of 1995, no persons are required to respond to a collection of information unless it displays a valid OMB control number.

STATEMENT CLAIMING SMALL ENTITY STATUS (37 CFR 1.9(f) & 1.27(b))--INDEPENDENT INVENTOR	Docket Number (Optional) 112756-700

Applicant, Patentee, or Identifier: RICHARD WALKER

Application or Patent No.: To be assigned

Filed or Issued: Herewith

Title: PERSONAL PFN SYSTEMS FOR ACCOUNTABLE TRACKING REMOTE MANAGEMENT AND AGGRESIVE CONTROL SCENARIOS

As a below named inventor, I hereby state that I qualify as an independent inventor as defined in 37 CFR 1.9(c) for purposes of paying reduced fees to the Patent and Trademark Office described in

- [XX] the specification filed herewith with title as listed above.
- [ ] the application identified above.
- [ ] the patent identified above.

I have not assigned, granted, conveyed, or licensed, and am under no obligation under contract or law to assign, grant, convey, or license, any rights in the invention to any person who would not qualify as an independent inventor under 37 CFR 1.9(c) if that person had made the invention, or to any concern which would not qualify as a small business concern under 37 CFR 1.9(d) or a nonprofit organization under 37 CFR 1.9(e).

Each person, concern, or organization to which I have assigned, granted, conveyed, or licensed or am under an obligation under contract or law to assign, grant, convey, or license any rights in the invention is listed below:

- [XX] No such person, concern, or organization exists.
- [ ] Each such person, concern, or organization is listed below.

Separate statements are required from each named person, concern, or organization having rights to the invention stating their status as small entities. (37 CFR 1.27)

I acknowledge the duty to file, in this application or patent, notification of any change in status resulting in loss of entitlement to small entity status prior to paying, or at the time of paying, the earliest of the issue fee or any maintenance fee due after the date on which status as a small entity is no longer appropriate. (37 CFR 1.28(b))

Richard C. Walker		
NAME OF INVENTOR	NAME OF INVENTOR	NAME OF INVENTOR
Richard C Walker		
Signature of inventor	Signature of inventor	Signature of inventor
5/1/00		
Date	Date	Date

Burden Hour Statement: This form is estimated to take 0.2 hours to complete. Time will vary depending upon the needs of the individual case. Any comments on the amount of time you are required to complete this form should be sent to the Chief Information Officer, Patent and Trademark Office, Washington, DC 20231. DO NOT SEND FEES OR COMPLETED FORMS TO THIS ADDRESS. SEND TO: Assistant Commissioner for Patents, Washington, DC 20231.

FIG. 1 RF TRACKINGFOR PERSONAL PFN'S

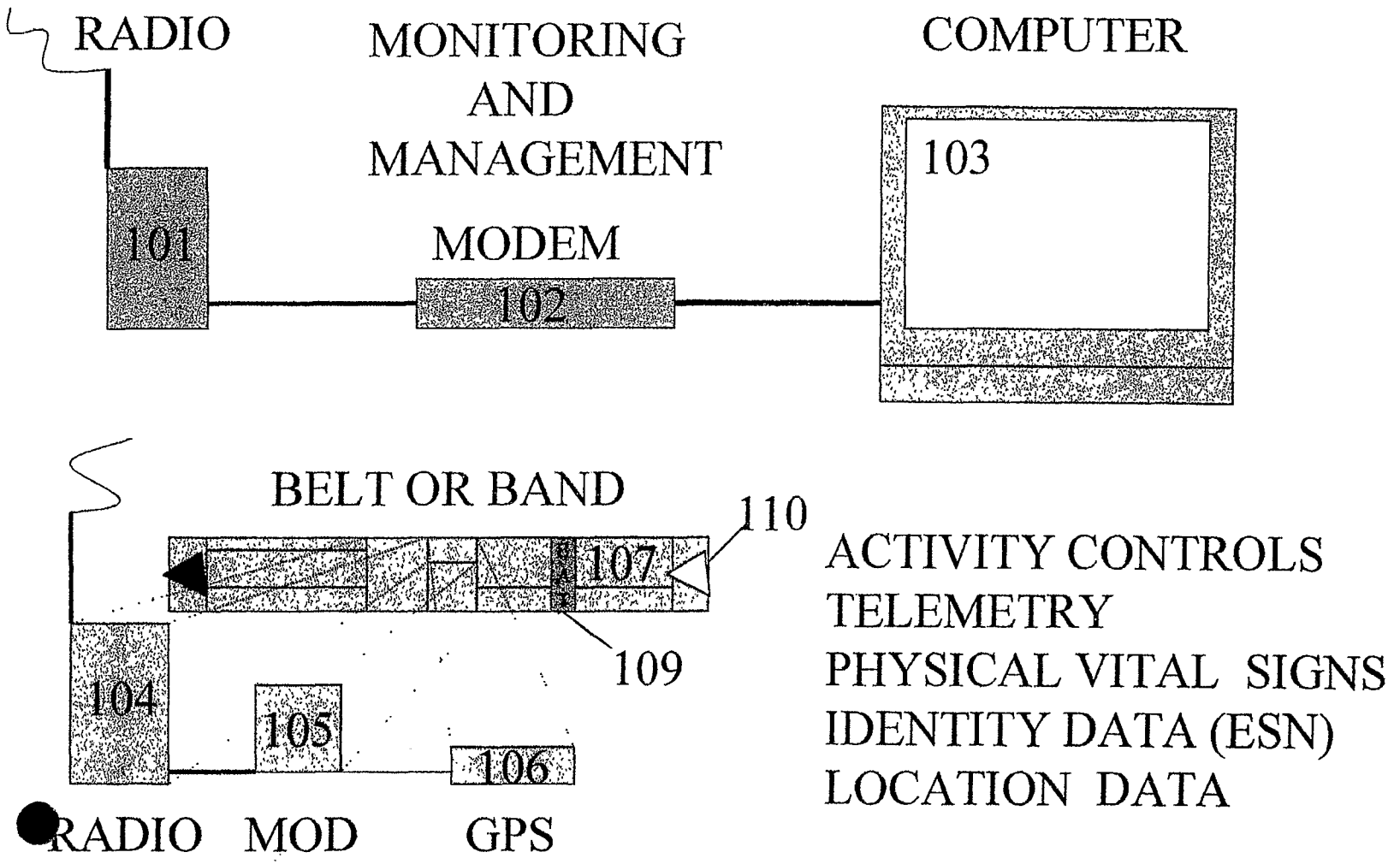

60200872.050100

FIG.2 PAGER TRACKING FOR PERSONAL PFN'S

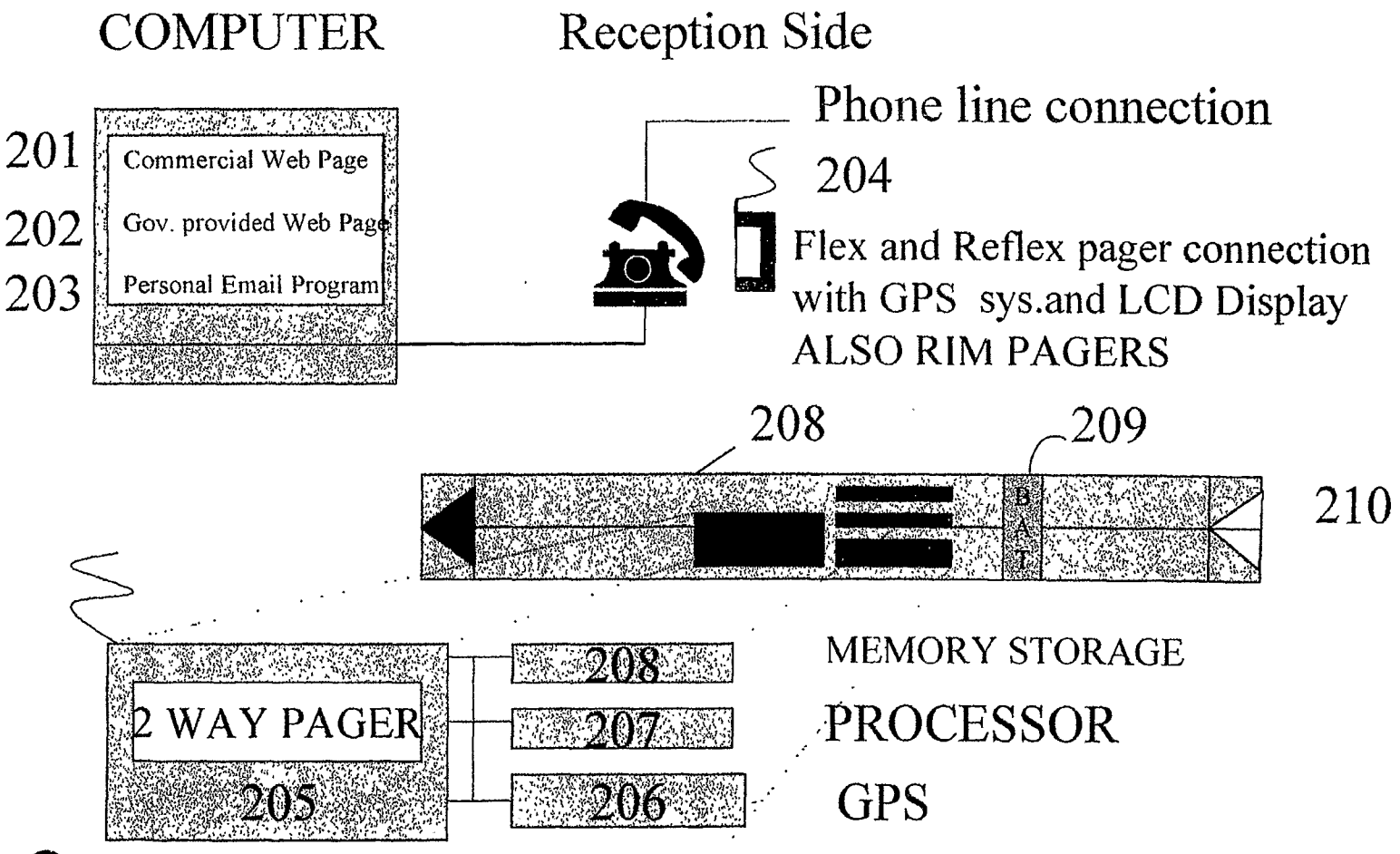

60200872.050100

FIG 2A 112756-700

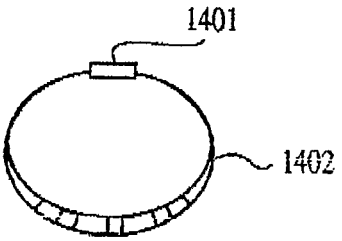

FIG. 13A

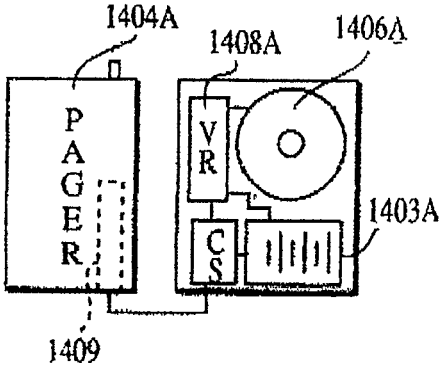

FIG. 13C

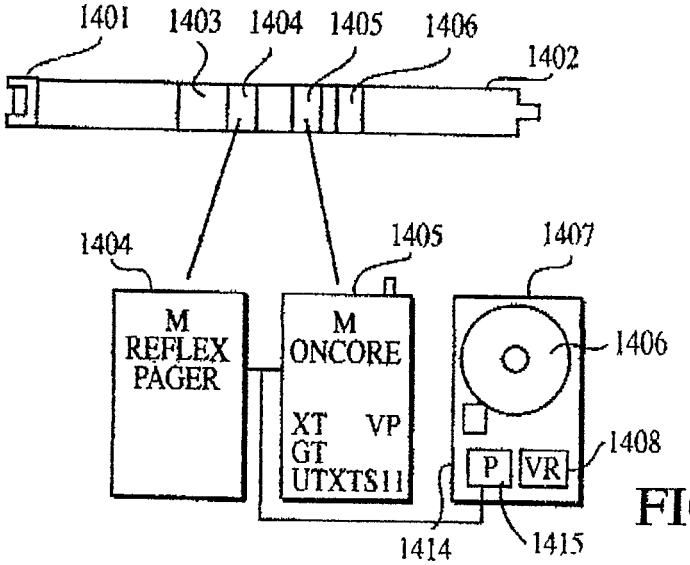

FIG. 13B

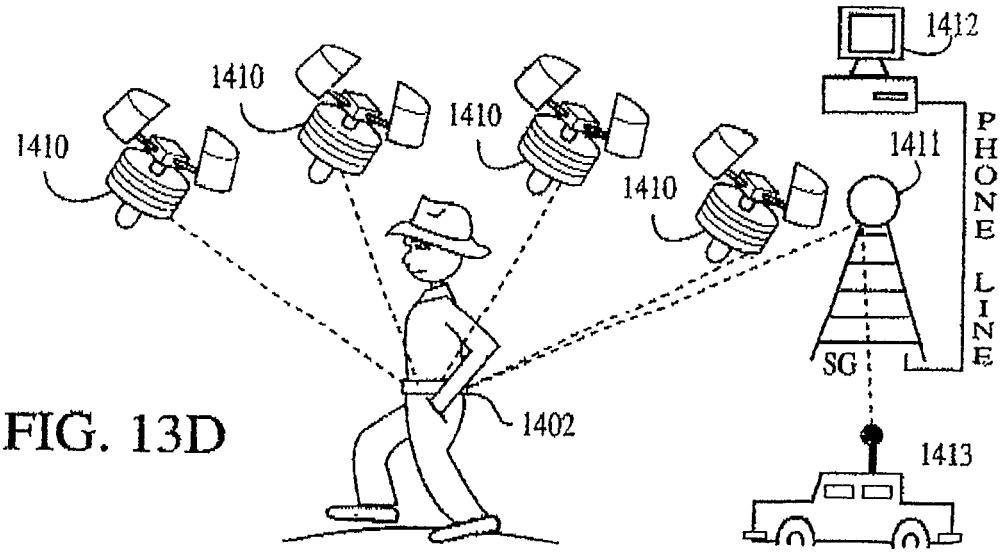

FIG. 13D

11275; 100

FIG. 3

CELLLULAR PHONE TRACKING FOR PERSONAL PFN

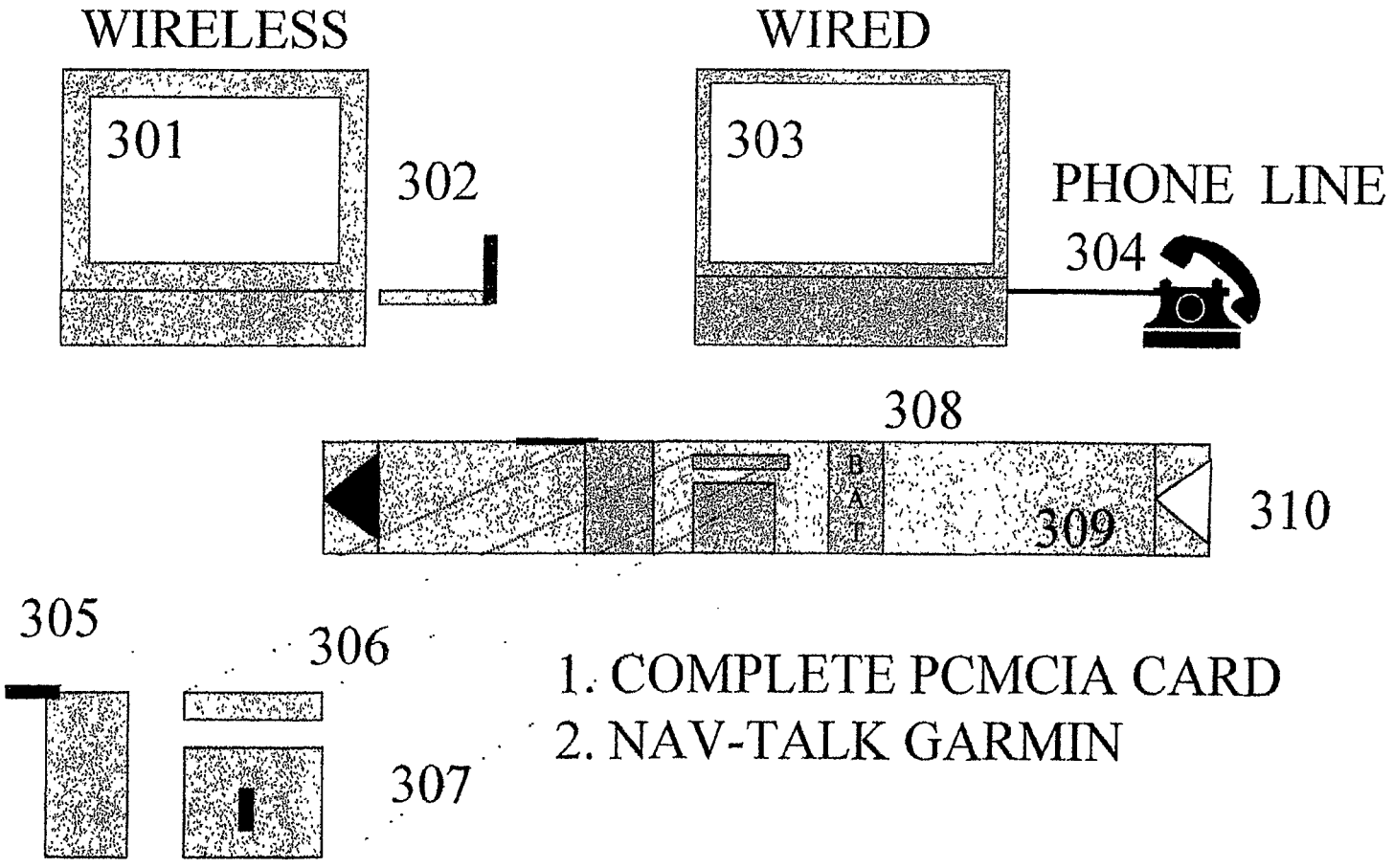

FIG 4

NEXTEL, RADIO, PAGER, AND PHONE

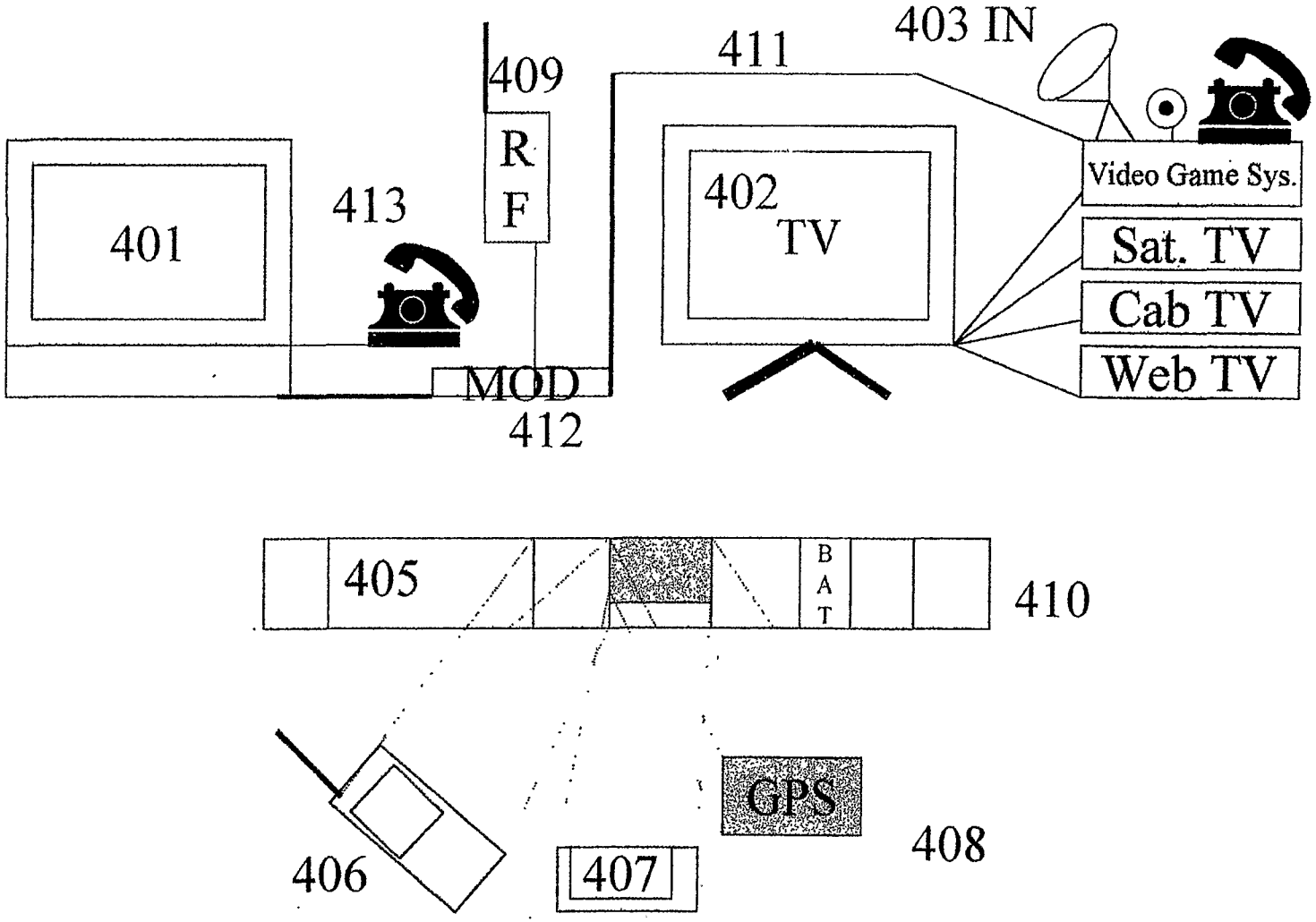

60200872 .050100

112734 - 100

FIG. 5

BELT, CLASP, COLLAR OR BRACELET SECURITY SYSTEM

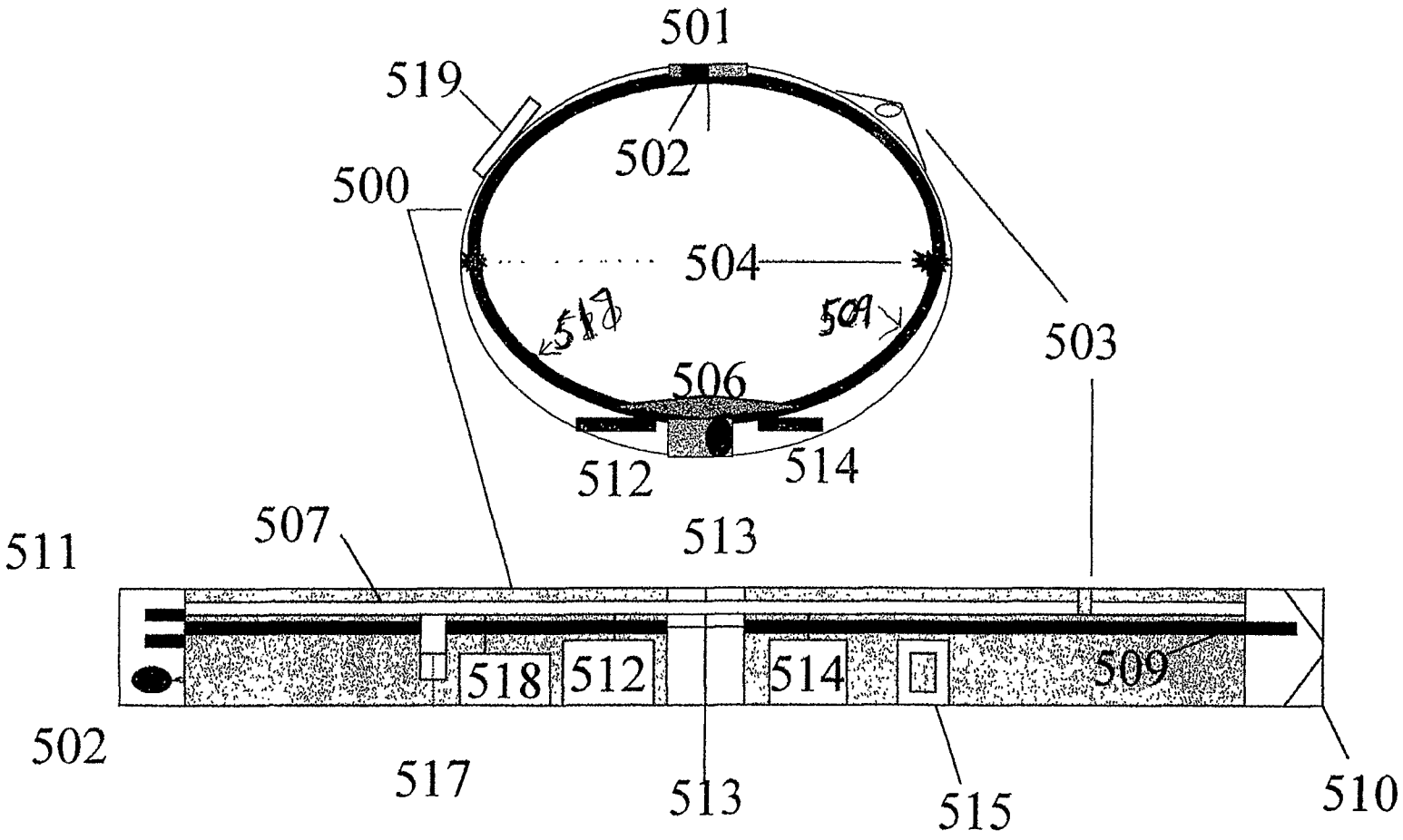

60200872.050100

FIG 5A

112756-700

FIG 22

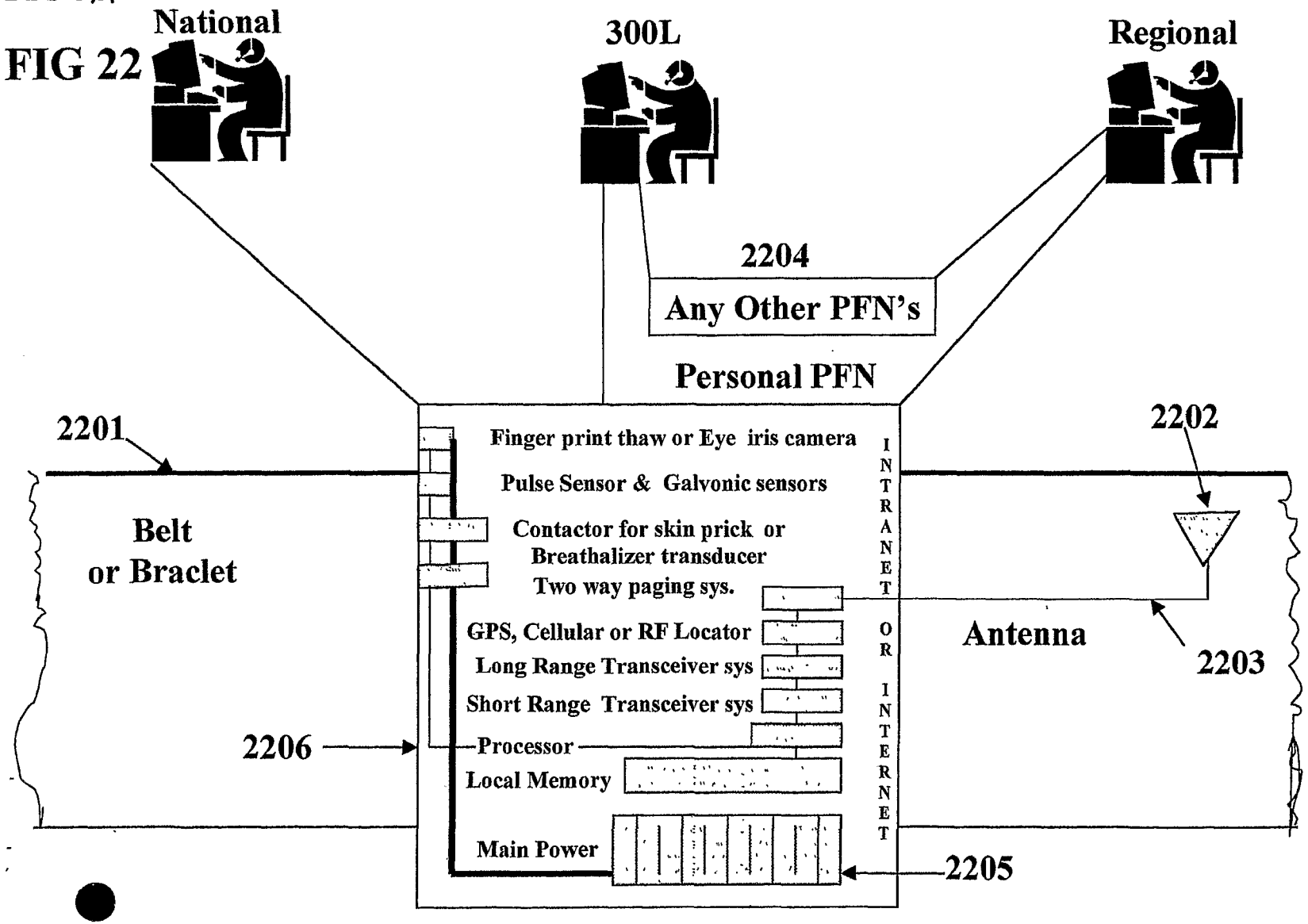

60200872 .050100

FIG 5B

112756-700

FIG 18 EARLIER

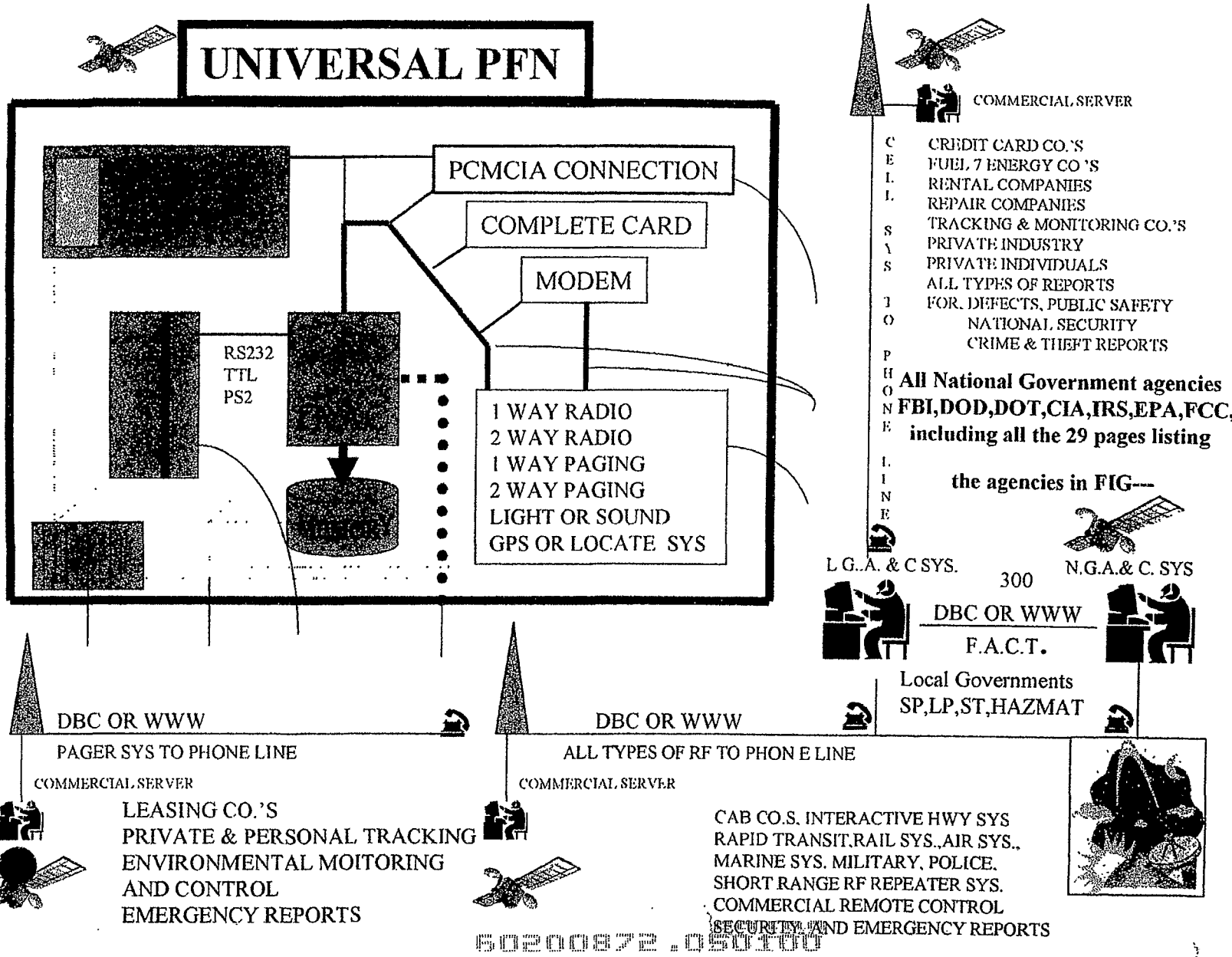

60200872 .050100

FIG. 6

PRODUCTS & APPLICATIONS

RF REPEATER SYSTEMS
TOT SPOT,
HUNT WELL
PET POINTER,
FRIEND FINDER

WIRELESS PAGER AND TELEPHONY
TRAC A CON . COM/GOV
SKI SEARCHER
SWIM SEAKER
FAMILY FINDER
PATIENT PAL OR HEALTH WATCH
LOST AND FINDER
PEOPLE LOCATOR
PET LOCATOR
PHYSICAL TELEMETRY
IDENTITY CONFIRM ATION

*ALL PRODUCT NAMES STATED HERE
ARE PROPRIETARY TO KLINE AND WALKER LLC
AND COMMERCIAL USE IS GOVERNED BY LICENSING
AUTHORITY

ACTIVITY CONTROLS
AUDIO & VIDEO
P.I.N.- SYSTEMS(IDENTITY)
HEALTH CARE
AUTOMATED MEDICATIONS
BEHAVIOR SUPRESSION SYS.
SEDITIVES
SHOCKING
DECRETES IN ALL CONTROLS

SENSORY TELEMETRY
BLOOD PRESSURE
HEART RATE
CHEMICAL SENSORS
WATER
HEAT
DRUG SENSORS
DESCRETES, EMF,RADIATION
APPLICATION SPECIFIC

ACCOUNABILITY
MEMORY STORAGE
REMOTE MEMORY
LOCAL MEMORY

60200872 .050100

112756-700

1ST OF THREE APPENDIX

NUMBERED i THROUGH iii

PAGE 1 OF 6

APPENDIX i

112756-700

Communication

1 OF 6 PAGES RIM PAGER TO GPS PROTOCOL AND SOFTWARE COMMANDS

Command Sequences:

The IP-950 will communicate with the processor using the "BEL (Hex 0x07)" ASCII character followed by a command/argument byte. No delay is required between the BEL and the actual command sequence. All COM port communications take place at 9600 baud, 8-bit data, No parity, stop-bit=1 (9600, 8, N, 1).

Commands are composed of 2 bytes. First byte is the synchronization byte 07H (BEL) and is followed by a command/argument byte (see table below).

Acknowledges are composed of 2 bytes and share the same structure as the commands (07H + 31H).

Bit#	7	6	5	4	3	2	1	0
	C4	C3	C2	C1	C0	A2	A1	A0

C4-C0: Command bits (5 bits)

A2-A0: Argument bits (3 bits)

C4-C0	A2-A0	(HEX)	(DEC)	Description
00000	111	07	7	Sync byte (BEL) - precedes all commands.
00100	001	21	33	Open COM1 (GPS) port. Acknowledgement is sent.
00100	010	22	34	Open COM2 port. Acknowledgement is sent. (Top Right
00100	011	23	35	Open COM3 port. Acknowledgement is sent. (Bottom
00101	xx0	28	40	Buzzer OFF. No ACK.
00101	xx1	29	41	Buzzer ON. No ACK.
00110	001	31	43	Acknowledgment code. No ACK.
01000	xxx	40	64	Flash off. No ACK.
01001	xRR	49-4B	73-75	Flash ORANGE at "RR" Hz. No ACK.
01010	xRR	51-53	81-83	Flash GREEN at "RR" Hz. No ACK.
01011	xRR	59-5B	89-91	Flash GREEN-ORANGE at "RR" Hz. No ACK.
01100	xRR	61-63	97-99	Flash RED at "RR" Hz. No ACK.
01101	xRR	69-6B	105-107	Flash RED-ORANGE at "RR" Hz. No ACK.
01110	xRR	71-73	113-115	Flash RED-GREEN at "RR" Hz. No ACK.
01111	xRR	79-7B	121-123	Flash RED-GREEN-ORANGE at "RR" Hz. No ACK.

Where:

RR: 00 = Invalid

RR: 01 = 1 Hz

RR: 10 = 2 Hz

RR: 11 = 3 Hz

x: This bit is ignored by the cradle processor.

Examples:

To flash RED-ORANGE at 2 Hz:

07H 6AH

processor will not send an acknowledgement.

To open the COM2 port (Top Right):

07H [illegible]

will send an acknowledgement:

07H 31H

NOTE 1: Codes not listed in the table are invalid and are ignored by the cradle processor.

NOTE 2: Following a successful DTR/DSR negotiation, processor will send the cradle detection pattern "C@DL" (43H 40H 44H 4CH) mechanism mentioned in the "Cradle Detection" section below.

NOTE 3: If previous condition exists on the LED, then, on receiving the BEL command sequence from the IP-950 for a FLASHING operation, processor will alternate between previous condition of the LED and the new flashing request **every 5 seconds** until a new BEL command sequence arrives or a FLASH OFF command arrives.

Cradle detection:

The Rim Pager IP-950 has an internal connector used for communication as described below:

Pin #

1	2	3	4	5	6	7	14
GND	DTR	TxD	DSR	RxD	RTS	CTS	GND
	(Output from IP-950)		**(Input** to IP-950)				

All other pins are not connected.

detection will be performed using the pins 2 and 4 on the IP-950's serial port and the charging contacts. The pin 2 (labeled DTR) is an OUTPUT port for the IP-950 and pin 4 (DSR) is an INPUT port for the IP-950. The IP-950 application will use the ***CommRegisterNotifyPattern*** feature of the RIM engine to detect an event on the serial port. This will function as follows:

1. In order for the *Pattern* mechanism to work, the serial port of the IP-950 MUST BE CLOSED and the processor MUST detect the charging contacts.
2. processor will raise pin 4 HIGH, wait to detect pin 2 on the IP-950 to go HIGH (this is done by the IP-950), then it will send a 4-byte pattern ("**C@DL**") immediately. This is the mechanism described in the RIM "Developer's Guide" in the *CommRegisterNotifyPattern* section – this section is added here for convenience. **NOTE THE BAUD RATE SPECIFIED HERE**.

```
Pager API functions - Serial communications API functions

Developer's Guide - RIM Inter@ctive Pager 950

CommRegisterNotifyPattern

void CommRegisterNotifyPattern( void *Pattern )

Pattern:

This parameter points to a 4 byte string containing

a pattern. The pattern's first byte must be non-zero,

and is always 4 bytes in length.
```

Remarks:

This function allows multiple applications to register a pattern to look for on the serial port. ***While DTR is active, the port is monitored at 9600 baud 8N1.*** *If the specified pattern occurs, the application that registered that pattern will be sent a COMM_PATTERN_NOTIFY event.*

Applications may de-register patterns by calling CommRegisterNotifyPattern with a NULL parameter. Applications can only register one pattern at a time. Registering a second pattern will cancel the first.

Examples:

CommRegisterNotifyPattern("abcd")

This will cause a CommRegisterNotifyPattern message to be sent to the calling task when the pattern abcd is seen on the port.

CommRegisterNotifyPattern("a")

This call is not legal, as the Pattern parameter points only to an a followed by zero followed by two unknown characters.

3. As per RIM, once the IP-950 detects a high on pin 4, it pulls pin 2 HIGH within 0.5 seconds and then it waits for about 2 seconds to receive the 4-byte unique pattern. If the IP-950 detects the pattern, then pin 2 is left in the HIGH state, else, it will pull the pin 2 LOW once the 2-second period expires.
4. If the IP-950 successfully decoded the pattern, the application will send the BEL command sequence to "OPEN" the COM 1 port (07H 21H). Once the application receives the response from the cradle processor, it will reset pin 2 on the IP-950 to the LOW state.
5. If the IP-950 is unable to detect the 4-byte pattern, it will pull pin 2 LOW. processor **will detect this LOW signal on pin 2, and it will pull pin 4 on the cradle's port LOW** and restart from step 2. The chart below describes the various scenarios

	IP-950 SERIAL PORT	CHARGING CONTACTS	CRADLE's CONTROL ON PIN-4 OF IP-950	COMMENTS
1.	Connected	Connected	PULL HIGH	Pager is inserted properly into the cradle and the detection process starts and if detected, the cradle processor leaves pin 4 in the HIGH state.
2.	Closed (via s/w)	Connected	STAYS HIGH	Since cradle detects the charging contacts, it will NOT cycle pin 4 from HIGH to LOW.
3.	Connected	No contact	STAYS HIGH	This is the case where the user pulled back the charging contacts but did not pull out the IP-950. In this case, the IP-950 will continue talking to the GPS. processor will show cycling of R/G/ LED – no charging contact condition. ***Also, the GPS connection may be unreliable since the IP-950 is not secured properly.***
4.	Closed (via s/w)	No contact	STAYS HIGH	Application closed the serial port of IP-950 (*not any of the "BEL" commands*) and pulled back the charging contact. processor should show cycling of R/G/ LED – no pager in cradle condition.

NOTE that other peripheral devices (printers, etc.) may use the pin 4 in a different manner. So, it is important to make sure the processor is NOT tied to any specific state of this pin.

The processor will have the mechanism to FLOAT the use of DSR/DTR on COM 2 and 3 while still maintaining RTS/CTS connection on COM 2 by default. JUMPER mechanism on COM 3 to connect RTS/CTS to the IP-950's DSR/DTR. The IP-950 engine does not have any commands to monitor RTS/CTS and hence it will have to use DSR/DTR mechanism to talk to devices on COM ports 2 and 3.

API

GPS

The Trimble GPS has an eight-pin header as follows:

1	2	3	4	5	6	7	8
TXD_B	VCC	TXD_A	V_BACKUP	RXD_A	1PPS	RXD_B	GND

The pager will communicate with the GPS through TXD_A and RXD_A under TSIP/normal RS-232 for TAIP or other protocols. The serial port communications take place at 9600 baud, 8-bit data, No parity, stop-bit=1 (9600, 8, N, 1). The default protocol will be TAIP format.

No Differential GPS operation on the Lassen-SK8 is being proposed.

Optional add-on board for two external communications port and optional buzzer:

An optional COM port 2 will be available for communication between the pager and a serial device (say, a printer). COM port 2 will **ALWAYS** be accessed by the IP-950 via software controls to the ontroller (BEL, followed by the OPEN COM2 (07H 22H) code). The IP-950 will be connected to COM port 2 until the IP-950 application changes the command. *The only exceptions are, (1) when the main power to the cradle is lost, it will default to COM 1, and (2) when there is no GPS card in the cradle, COM port 2 will be open by default.*

There are two configurations possible for the DB-9 connector - DCE requiring a straight one to one cable or DTE that requires a null-modem cable. DTE configuration has been retained.

The table below represents the standard DTE configuration (same as a PC)

1	2	3	4	5	6	7	8	9
N/C	RXD	TXD	DTR	GND	DSR	RTS	CTS	N/C

A COM port 3 will also be available with this option for interface to a Symbol Technology type bar code reader. This port will also be accessed by the pager via software controls only (BEL, followed by the OPEN COM 3 (07H 23H) code).

NOTE: All COM port communications take place at 9600 baud, 8-bit data, No parity, stop-bit=1 (9600, 8, N, 1).

Buzzer: An optional buzzer is also provided in the cradle. The specifications are as follows:

```
Operating Voltage: 3 - 16 Vdc

Max rated current: 7 mA

Min. Sound output: 80 dBA/10cm

Frequency output: 4000 +/- 500 Hz

Tone Nature: Single

Operating temperature: -20 / +60 deg C
```

APENDIX ii

PAGE 1 OF 10

11275C-700

AM26LS32AC, AM26LS33AC, AM26LS32AM, AM26LS33AM
QUADRUPLE DIFFERENTIAL LINE RECEIVERS

SLLS115B – OCTOBER 1980 – REVISED MAY 1995

- AM26LS32A Meets or Exceeds the Requirements of ANSI EIA/TIA-422-B, EIA/TIA-423-B, and ITU Recommendations V.10 and V.11
- AM26LS32A Has ±7-V Common-Mode Range With ±200-mV Sensitivity
- AM26LS32A Has ±15-V Common-Mode Range With ±500-mV Sensitivity
- Input Hysteresis . . . 50 mV Typical
- Operates From a Single 5-V Supply
- Low-Power Schottky Circuitry
- 3-State Outputs
- Complementary Output Enable Inputs
- Input Impedance . . . 12 kΩ Min
- Designed to Be Interchangeable With Advanced Micro Devices AM26LS32™ and AM26LS33™

AM26LS32AC, AM26LS33AC . . . D OR N PACKAGE
AM26LS32AM, AM26LS33AM . . . J PACKAGE
(TOP VIEW)

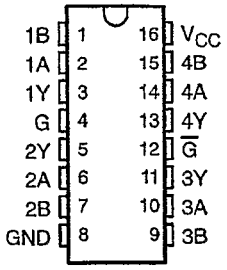

AM26LS32AM, AM26LS33AM . . . FK PACKAGE
(TOP VIEW)

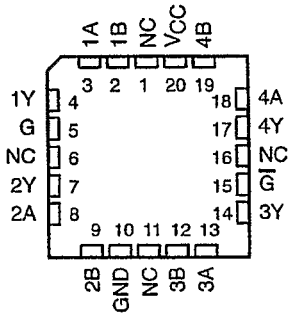

NC—No internal connection

description

The AM26LS32A and AM26LS33A are quadruple differential line receivers for balanced and unbalanced digital data transmission. The enable function is common to all four receivers and offers a choice of active-high or active-low input. The 3-state outputs permit connection direct to a bus-organized system. Fail-safe design ensures that if the inputs are open, the outputs are always high.

Compared to the AM26LS32 and the AM26LS33, the AM26LS32A and AM26LS33A incorporate an additional stage of amplification to improve sensitivity. The input impedance has been increased resulting in less loading of the bus line. The additional stage has increased propagation delay; however, this does not affect interchangeability in most applications.

The AM26LS32AC and AM26LS33AC are characterized for operation from 0°C to 70°C. The AM26LS32AM and AM26LS33AM are characterzed for operation over the full military temperature range of −55°C to 125°C.

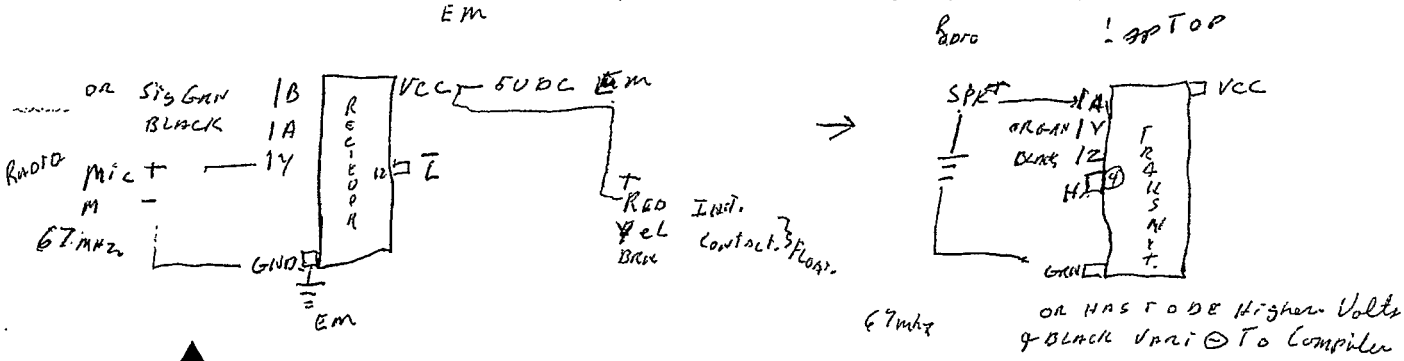

Please be aware that an important notice concerning availability, standard warranty, and use in critical applications of Texas Instruments semiconductor products and disclaimers thereto appears at the end of this data sheet.

AM26LS32 and AM26LS33 are trademarks of Advanced Micro Devices, Inc.

PRODUCTION DATA Information is current as of publication date. Products conform to specifications per the terms of Texas Instruments standard warranty. Production processing does not necessarily include testing of all parameters.

Copyright © 1995, Texas Instruments Incorporated

TEXAS INSTRUMENTS
POST OFFICE BOX 655303 • DALLAS, TEXAS 75265

AM26LS32AC, AM26LS33AC, AM26LS32AM, AM26LS33AM QUADRUPLE DIFFERENTIAL LINE RECEIVERS

SLLS115B – OCTOBER 1980 – REVISED MAY 1995

FUNCTION TABLE
(each receiver)

DIFFERENTIAL A – B	ENABLES G	ENABLES $\overline{G}$	OUTPUT Y
$V_{ID} \geq V_{IT+}$	H	X	H
	X	L	H
$V_{IT-} \leq V_{ID} \leq V_{IT+}$	H	X	?
	X	L	?
$V_{ID} \leq V_{IT-}$	H	X	L
	X	L	L
X	L	H	Z
Open	H	X	H
	X	L	H

H = high level, L = low level, ? = indeterminate,
X = irrelevant, Z = high impedance (off)

logic symbol†

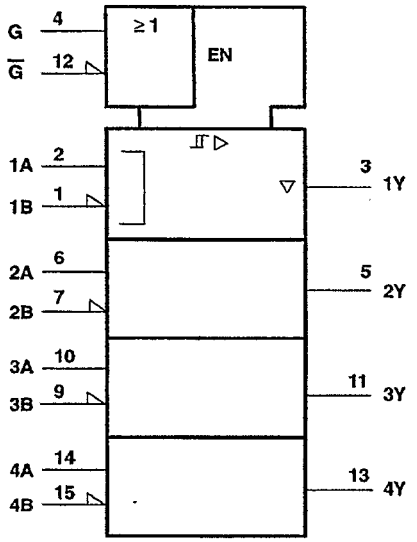

† This symbol is in accordance with ANSI/IEEE Std 91-1984 and IEC Publication 617-12.
Pin numbers shown are for D, J, and N packages.

logic diagram (positive logic)

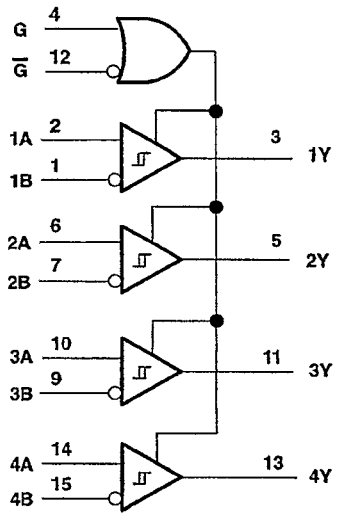

001050 . 2780020 9

301 858-3247

schematics of inputs and outputs

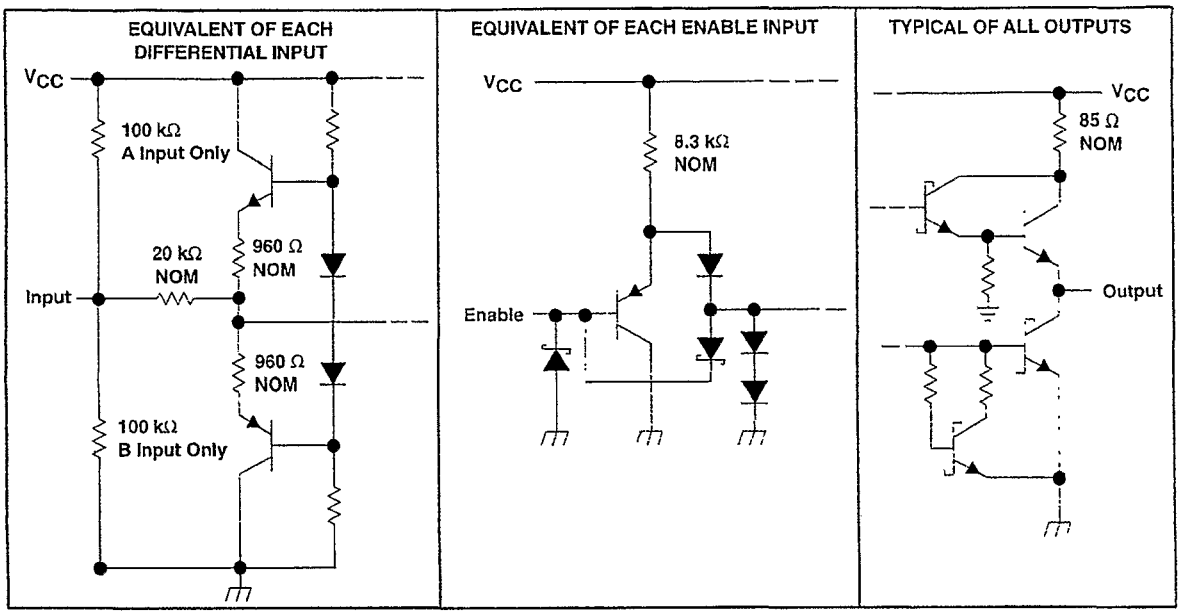

absolute maximum ratings over operating free-air temperature range (unless otherwise noted)†

Supply voltage, V_{CC} (see Note 1) . . . . . 7 V
Input voltage V_I: any differential input . . . . . ±25 V
other inputs . . . . . 7 V
Differential input voltage, V_{ID} (see Note 2) . . . . . ±25 V
Continuous total power dissipation . . . . . See Dissipation Rating Table
Operating free-air temperature range, T_A: AM26LS32AC . . . . . 0°C to 70°C
AM26LS33AC . . . . . 0°C to 70°C
AM26LS32AM . . . . . −40°C to 85°C
AM26LS33AM . . . . . −40°C to 85°C
Storage temperature range, T_{stg} . . . . . −65°C to 150°C
Lead temperature 1,6 mm (1/16 inch) from case for 10 seconds: D or N package . . . . . 260°C
Case temperature for 60 seconds, T_C: FK package . . . . . 260°C
Lead temperature 1,6 mm (1/16 inch) from case for 60 seconds: J package . . . . . 300°C

† Stresses beyond those listed under "absolute maximum ratings" may cause permanent damage to the device. These are stress ratings only, and functional operation of the device at these or any other conditions beyond those indicated under "recommended operating conditions" is not implied. Exposure to absolute-maximum-rated conditions for extended periods may affect device reliability.

NOTES: 1. All voltage values, except differential voltages, are with respect to the network ground terminal.
2. Differential voltage values are at the noninverting (A) input terminals with respect to the inverting (B) input terminals.

DISSIPATION RATING TABLE

PACKAGE	$T_A \le 25°C$ POWER RATING	DERATING FACTOR ABOVE $T_A = 25°C$	$T_A = 70°C$ POWER RATING	$T_A = 125°C$ POWER RATING
D	950 mW	7.6 mW/°C	608 mW	—
FK	1375 mW	11.0 mW/°C	880 mW	275 mW
J	1375 mW	11.0 mW/°C	880 mW	275 mW
N	1150 mW	9.2 mW/°C	736 mW	—

AM26LS32AC, AM26LS33AC, AM26LS32AM, AM26LS33AM
QUADRUPLE DIFFERENTIAL LINE RECEIVERS

SLLS[illegible] – OCTOBER 1980 – REVISED MAY 1995

recommended operating conditions

		AM26LS32AC AM26LS33AC			AM26LS32AM AM26LS33AM			UNIT
		MIN	NOM	MAX	MIN	NOM	MAX	
Supply voltage, V_{CC}		4.75	5	5.25	4.5	5	5.5	V
High-level input voltage, V_{IH}		2			2			V
Low-level input voltage, V_{IL}				0.8			0.8	V
Common-mode input voltage, V_{IC}	AM26LS32AC, AM26LS32AM			±7			±7	V
	AM26LS33AC, AM26LS33AM			±15			±15	
High-level output current, I_{OH}				−440			−440	µA
Low-level output current, I_{OL}				8			8	mA
Operating free-air temperature, T_A		0		70	−55		125	°C

electrical characteristics over recommended ranges of V_{CC}, V_{IC}, and operating free-air temperature (unless otherwise noted)

PARAMETER		TEST CONDITIONS			MIN	TYP†	MAX	UNIT
V_{IT+}	Positive-going input threshhold voltage	$V_O = V_{OH}$min, $I_{OH} = -440$ µA		AM26LS32A			0.2	V
				AM26LS33A			0.5	
V_{IT-}	Negative-going input threshhold voltage	$V_O = 0.45$ V, $I_{OL} = 8$ mA		AM26LS32A	−0.2‡			V
				AM26LS33A	−0.5‡			
V_{hys}	Hysteresis voltage ($V_{IT+} - V_{IT-}$)					50		mV
V_{IK}	Enable input clamp voltage	V_{CC} = MIN, $I_I = -18$ mA					−1.5	V
V_{OH}	High-level output voltage	V_{CC} = MIN, $V_{I(G)} = 0.8$ V,	$V_{ID} = 1$ V, $I_{OH} = -440$ µA	'32AC, '33AC	2.7			V
				'32AM, '33AM	2.5			
V_{OL}	Low-level output voltage	V_{CC} = MIN, $V_{I(G)} = 0.8$ V	$V_{ID} = -1$ V,	$I_{OL} = 4$ mA			0.4	V
				$I_{OL} = 8$ mA			0.45	
I_{OZ}	Off-state (high-impedance-state) output current	V_{CC} = MAX		$V_O = 2.4$ V			20	µA
				$V_O = 0.4$ V			−20	
I_I	Line input current	$V_I = 15$ V,	Other input at −10 V to 15 V				1.2	mA
		$V_I = -15$ V,	Other input at −15 V to 10 V				−1.7	
$I_{I(EN)}$	Enable input current	$V_I = 5.5$ V					100	µA
I_{IH}	High-level enable current	$V_I = 2.7$ V					20	µA
I_{IL}	Low-level enable current	$V_I = 0.4$ V					−0.36	mA
r_I	Input resistance	$V_{IC} = -15$ V to 15 V, One input to ac ground			12	15		kΩ
I_{OS}	Short-circuit output current§	V_{CC} = MAX			−15		−85	mA
I_{CC}	Supply current	V_{CC} = MAX,	All outputs disabled			52	70	mA

† All typical values are at $V_{CC} = 5$ V, $T_A = 25°C$, and $V_{IC} = 0$.

‡ The algebraic convention, in which the less positive (more negative) limit is designated as minimum, is used in this data sheet for threshold levels only.

§ Not more than one output should be shorted to ground at a time, and duration of the short circuit should not exceed one second.

TEXAS INSTRUMENTS
POST OFFICE BOX 655303 • DALLAS, TEXAS 75265

switching characteristics, V_{CC} = 5 V, T_A = 25°C

PARAMETER		TEST CONDITIONS	MIN	TYP	MAX	UNIT
t_{PLH}	Propagation delay time, low-to-high-level output	C_L = 15 pF, See Figure 1		20	35	ns
t_{PHL}	Propagation delay time, high-to-low-level output			22	35	ns
t_{PZH}	Output enable time to high level	C_L = 15 pF, See Figure 1		17	22	ns
t_{PZL}	Output enable time to low level			20	25	ns
t_{PHZ}	Output disable time from high level	C_L = 5 pF, See Figure 1		21	30	ns
t_{PLZ}	Output disable time from low level			30	40	ns

PARAMETER MEASUREMENT INFORMATION

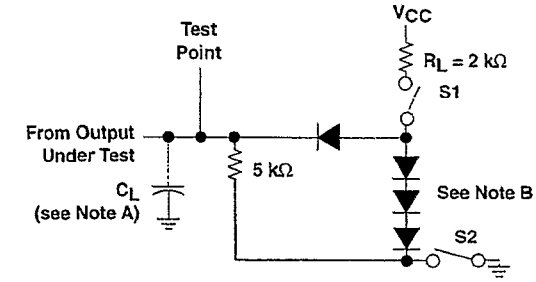

TEST CIRCUIT

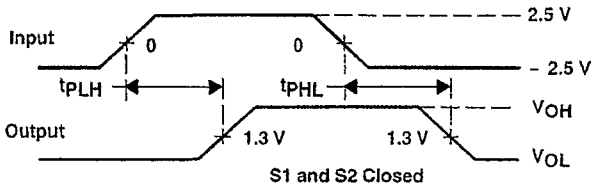

VOLTAGE WAVEFORMS FOR t_{PLH}, t_{PHL}

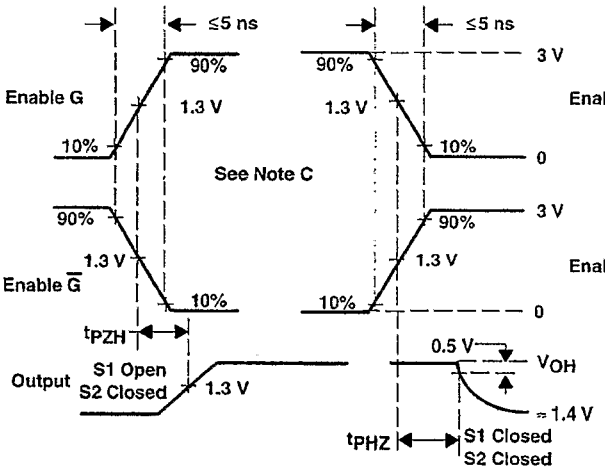

VOLTAGE WAVEFORMS FOR t_{PHZ}, t_{PZH}

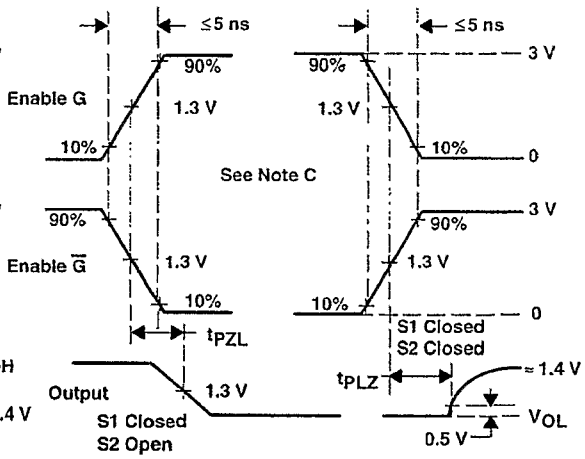

VOLTAGE WAVEFORMS FOR t_{PLZ}, t_{PZL}

NOTES. A. C_L includes probe and jig capacitance.
B. All diodes are 1N3064 or equivalent.
C. Enable G is tested with $\overline{G}$ high; $\overline{G}$ is tested with G low.

Figure 1

MODEM CONTROL

The CH1786 modem may be controlled by sending serial ASCII command sequences The commands are sent to the modem serially on the TXD pin. After execution of a received command, the modem returns a serial status message that can be read on pin RXD. This message indicates command completion status Refer to Table 3 for a complete list of status messages.

INITIALIZING THE MODEM

Before commands may be sent to the CH1786,the modem must be initialized. This consists of two events:

1) Reset .This is accomplished by applying a hardware reset pulse to pin RST or by switching the power off and then back on

2) Initial modem training. The modem must be trained to the host 's speed (2400,1200,300bps) and parity (odd, even, mark, space or none)

These activities are briefly described below.

Reset.

Upon applying power to the CH1786, the CH1786 automatically generates an internal reset pulse. The user can also reset the modem externally by applying a high-going reset pulse to the RST pin for at least 10ms after the +5V power supply has stabilized. Delay sending commands to CH1786 for 200ms after reset has been initiated to allow the CH1786 time to properly reconfigure.

Training the Modem.

Each modem must be trained to match its host 's speed and parity so that it is able to recognize serial asynchronous commands sent to it by the host UART. The host must retrain the modem each time a reset pulse is applied on RST or after a RESET serial command has been issued

Modem Training Command Sequence.

The CH1786 is trained by sending it the following sequence:

Enter· AT [CR]
Where. A and T may be either upper or lower case but must be the same case.
[CR] represents carriage return

The "AT" sequence is referred to as an attention sequence. The CH1786 will respond with one of the following status messages, depending on whether it is optioned for abbreviated or English status messages.

Result 0 [CR] (Abbreviated form)
Result· [CR][LF] OK [CR][LF] English form)
Where: [CR] represents carriage return (ASCII 13 or HEX 0D).
[LF] represents line feed (ASCII 10 or HEX 0A).

The modem is now in idle mode and is ready to accept commands. An alternate attention sequence "A/"may be sent which behaves much like the AT sequence except that it causes the previously entered command specified with an AT prefix to be executed. When given, it must be in upper case ASCII. No carriage return is needed.

THE COMMAND FORMAT

Typical commands consist of three elements. the attention sequence, the commands themselves, and a terminating carriage return.

AT [commands] [CR].

Where AT represents attention sequence
[commands] represents command strings
[CR] represents carriage return (ASCII 13 or HEX 0D)

When entering commands to the modem, the backspace character-control-H (ASCII 8 or HEX 08)can be used to edit mistakes "AT "and "A/"may not be edited however Multiple commands may be placed in the command line. A command line may be as long as 40 characters, excluding the letters AT By way of example, the command below instructs the CH1786 to configure itself to not echo characters when in command mode (E0)and then put itself in answer mode (A)

Enter.ATE0A [CR]

AT Command Set.

The available command set is divided into four types of commands· dial modifiers, basic commands, ampersand and percent commands. Refer to the complete list in Table 5

AT Command Data Rate.

With the serial interface, the rate is speed sensed for parity and format

THE STATUS MESSAGES

The CH1786 responds with a status message after each command is executed. This status message may either be a single digit followed by a carriage return or a carriage return and line feed with a message in English, followed by a carriage return and line feed.

The basic status code subsets are enabled with the Xn command. Where n=0,1,2,3,4 establishes the result codes allowed by the user.

X0 -Result Codes 0, 1, 2, 3, 4 allowed
X1 -Result Codes 0, 1, 2, 3, 4, 5, 10 allowed
X2 -Result Codes 0,1, 2, 3, 4, 5, 6, 10 allowed
X3 -Result Codes 0, 1, 2, 3, 4, 5, 7, 10 allowed
X4 -Result Codes 0, 1, 2, 3, 4, 5, 6, 7, 10 allowed

The CH1786 is factory set to X4, which allows all result codes

Table 3. Summary of Result Codes and Meanings.

Result Codes	Status Message	Meaning
0	OK	Command executed
1	CONNECT	Carrier detected at 300 bps
2	RING	Ring detected
3	NO CARRIER	Did not detect carrier
4	ERROR	Entry error
5	CONNECT 1200	Carrier detected at 1200 bps
6	NO DIAL TONE	Off-hook, but no response after 5 seconds
7	BUSY	Busy signal detected
10	CONNECT 2400	Carrier detected at 2400 bps

©2000 Cermetek Microelectronics, Inc.

TYPICAL CHARACTERISTICS

HIGH-LEVEL OUTPUT VOLTAGE
vs
HIGH-LEVEL OUTPUT CURRENT†

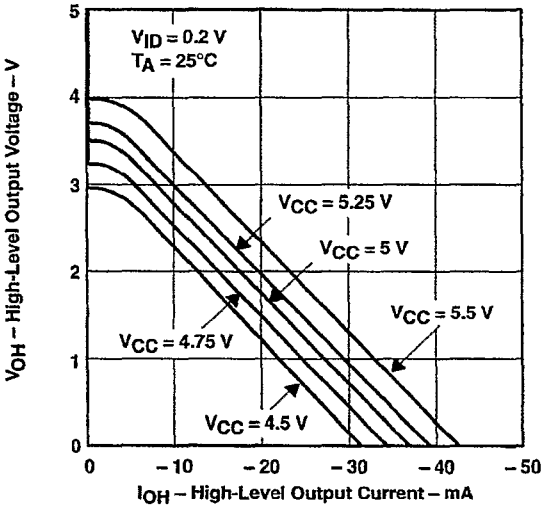

†V_{CC} = 5.5 V and V_{CC} = 4.5 V applies to M-suffix devices only.

Figure 2

HIGH-LEVEL OUTPUT VOLTAGE
vs
FREE-AIR TEMPERATURE

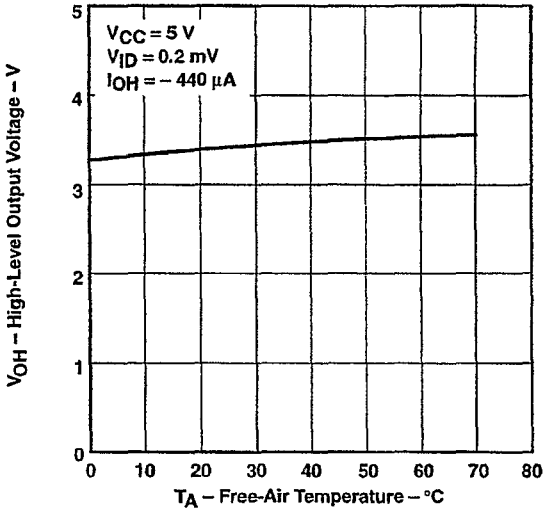

Figure 3

LOW-LEVEL OUTPUT VOLTAGE
vs
LOW-LEVEL OUTPUT CURRENT

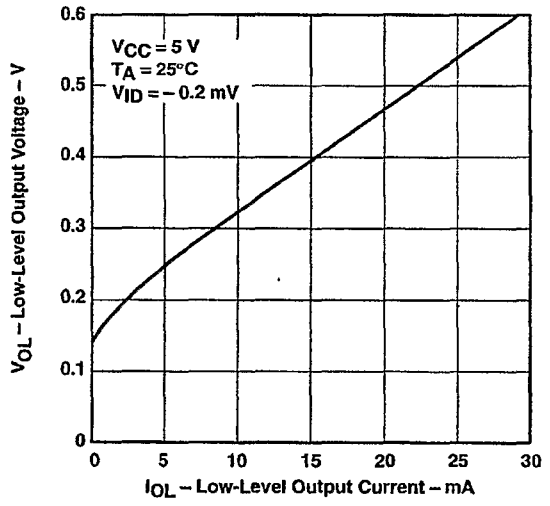

Figure 4

LOW-LEVEL OUTPUT VOLTAGE
vs
FREE-AIR TEMPERATURE

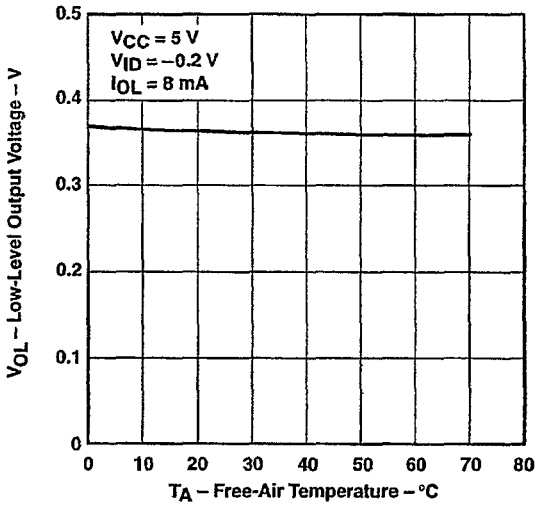

Figure 5

CH1786 Family of Ultra Small 2400 bps Modems

INTRODUCTION

The CH1786 family of modems offer the smallest footprint commercially available for a full function, FCC Part 68 approved 2400bps modem. These modems provide a fast, easy and flexible way to integrate a modem into any OEM product while utilizing the minimum amount of PCB space (1.0 "x 1.25 "x 0.53 "). The CH1786 family only requires two external interfaces: a CCITT V.24 serial interface that can be routed directly to a UART, and a Tip and Ring interface which goes directly to an RJ-11 jack for the PSTN line connection. The CH1786 can be controlled with industry standard AT commands and, hence, is compatible with available industry communication software.

All CH1786 modems support asynchronous operation at 2400bps, 1200bps, and 300bps to both Bell and CCITT standards. The resident PSTN line interface, or Data Access Arrangement (DAA), while being FCC approved, is also Canadian DOT approveable and can be approved in other countries that require 1500VAC RMS isolation requirements per UL 1950.

The CH1786 family of modems operate off a single 5-volt supply. The low power operation and automatic standby mode make these modems ideally suited for portable equipment. In addition, their small physical size affords maximum flexibility in equipment design.

FEATURES

- Supports Standards CCITT V.22bis,V 22,Bell 212,and Bell 103
- FCC Part 68 approved and DOT CSA CS-03 Part I approveable
- UL 1950 and CSA C22.2 950 Listed
- AT Command structure with extensions
- 1500 VAC RMS isolation barrier minimum, 2122V peak surge protection minimum
- Single 5 volt operation
- Low power operation with automatic reduced power standby mode
- Automatic adaptive and fixed compromise equalization
- Test modes and diagnostics
- Size:1.0 "x 1.25 "x 0.53 "(nominal)
- NVRAM allows storage of custom configurations and telephone numbers

CH1786 Family Includes:

CH1786LC	2400bps Modem, voice/ Inject, Hermetic Operating Temperature: 0°C to +70°C
CH1786NH	2400bps Modem, No Voice/Inject, Non-hermetic Operating Temperature. 0°C to +70°C
CH1786	2400bps Modem, NVRAM, Voice/ Inject, Operating Temperature: 0°C to +70°C
CH1786ET	2400bps Modem, NVRAM, Voice/ Inject, Hermetic, Operating Temperature: –40°C to +85°C
CH1786FX	Same as CH1786 with send and receive fax capability

The CH1786 comes with FCC Part 68 approval and is shipped from the factory with an FCC Part 68 label indicating the registration number and ringer equivalent. This label should be prominently displayed on the end product.

Figure 1. Functional Block Diagram of CH1786.

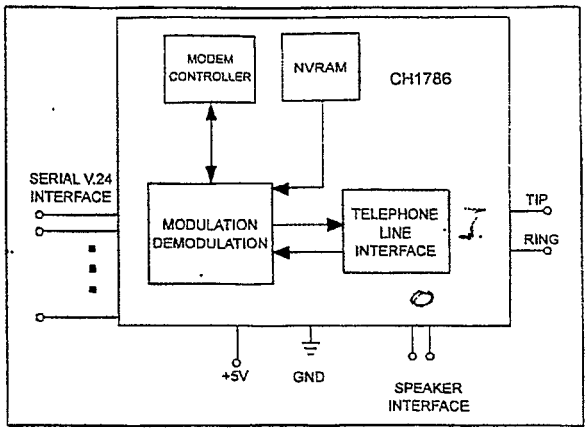

DESCRIPTION OF FUNCTIONAL BLOCKS AND DISCUSSION OF BASIC OPERATIONS

Figure 1 contains a functional block drawing of the CH1786 The CH1786 is a highly integrated, full-function modem, comprised of a modulator/ demodulator, controller, NVRAM (Non-Volatile RAM) and an FCC Part 68 approved PSTN line interface DAA (Data Access Arrangement)

Modulation/Demodulation and Modem Controller.

These functions are provided by a monolithic modem integrated circuit. This IC has built-in facilities to accommodate integrated AT command control and contains the necessary resident interfaces for general communication and routing to the DAA

Telephone Line Interface or DAA.

The CH1786 family of modems is designed to meet 1500VAC RMS isolation and provide 2122V peak surge protection Consequently, the CH1786 satisfies U.S FCC Part 68 and DOT CSA CS-03 Part I Canadian requirements, and will meet other international approval agency requirements that specify these levels of isolation

Figure 2. Voice/ Data Port Control

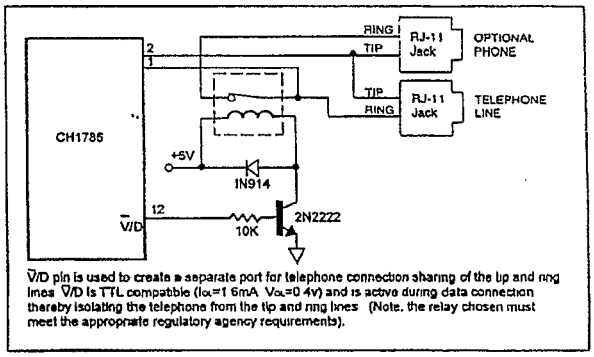

V/D pin is used to create a separate port for telephone connection sharing of the tip and ring lines V/D is TTL compatible (I_{OL}=1 6mA V_{OL}=0 4v) and is active during data connection thereby isolating the telephone from the tip and ring lines (Note. the relay chosen must meet the appropriate regulatory agency requirements).

©2000 Cermetek Microelectronics, Inc.

With the exception of the U.S., most countries (including Canada) require submission of the final product or system containing the CH1786 to the appropriate governing regulatory agency for approval. Typically this is accomplished by submitting the final end product to an independent test house or consultant for evaluation. The test house or consultant then forwards the test results and applicable documents to the regulatory agency. Call Cermetek for a list of suggested consultants.

Non-Volatile RAM (NVRAM).

The NVRAM present on the CH1786 is sufficient to store up to two user customized modem configurations. The AT&Wn command will store the active modem configuration in the selected NVRAM locations by specifying an n of 0 or 1

The AT&Yn command selects the modem configurations to be automatically recalled and made active upon a reset or power up. The ATZn command immediately recalls and activates a stored configuration. Refer to Tables 4, 5 and 6 for storable S-Registers and available commands

The NVRAM can save up to four telephone numbers with up to 36 digits or modifiers in each telephone number. The AT&Zn=s command will store s, the telephone number dial string. The individual NVRAM telephone number storage locations are selected by specifying an n of 0,1,2,or 3. The ATDTS=n command will cause the modem to dial the stored telephone number in location n. NVRAM is not available on the CH1786LC or CH1786NH.

SUPPORT FEATURES

"AT "Command Set.

A 40-character command line is supported. The command line starts with AT and may contain standard or enhanced commands The commands are compatible with EIA Document TR302.2/88-08006.

Serial Host Interface.

The serial interface is a V.24 (EIA-232) compatible interface. See pin description in Table 2.

Speaker Interface.

The SPK output reflects the receiver analog input and provides a signal that can be used to monitor call progress The SPK signal can drive a 300 Ω load directly. Typically, the SPK signal is input into an audio power amplifier and the amplifier, inturn, drives the speaker coil. The speaker is activated with the ATMn command. The speaker volume is adjusted using the ATLn command, where n is 0,1,2,or 3. Increasing numbers correspond to higher volume. Figure 6 indicates one method of driving an external 8 Ω speaker

Phone Control.

Cermetek 's CH1786 contains a pin called Voice or Data (V/D). The V/D pin toggles high when the modem goes off hook This pin can be used to activate a relay which can switch a telephone on or off the Tip and Ring incoming PSTN lines. This feature allows any telephone associated with the CH1786 to be disconnected when a data call is in progress, thereby preventing the data from being disturbed by an inadvertent telephone pick-up. See Figure 2.

Speed and Parity Selection.

Prior to call initiation, the host controller trains the modem to the host speed (2400,1200,or 300 bps) and parity (odd, even, mark, space, or none)via a host-initiated training sequence. This training also sets the speed of the data for originate calls. The CH1786 will automatically adjust to the originator 's speed when answering calls.

The CH1786 matches the host 's parity when it returns status messages to the host. During a data connection, however, the modem passes parity through without interpretation or alteration.

Sleep Mode.

To minimize power consumption, the CH1786 includes a power down feature called Sleep Mode. When activated, the CH1786 will automatically enter Sleep Mode after 0 to 254 seconds of inactivity The inactivity delay is selected using the ATS24 command The CH1786 is delivered from the factory with a 5 second inactivity delay enabled (i.e., ATS24=5). The CH1786 returns to normal operation when a ring signal is received or upon an input low signal on the TXD pin ATS24 = 255 disables the Sleep Mode and is the default if no value is set in register S24

A SLEEP output signal is available to control power to external devices. In Figure 6, a FET controlled by the SLEEP signal turns of the external speaker amplifier when the CH1786 enters Sleep Mode In Sleep Mode, power is reduced to approximately 50% of normal operating power

Guard Tone.

A guard tone of 550 Hz or 1800 Hz can be generated at 6 dB or 9 dB below the transmit level, respectively, by using the command &Gn Refer to "Cermetek AT Commands and S-Registers reference Guide" or the Cermetek web site at http://www.cermetek.com

Answer Tone.

A CCITT (2100 Hz) or Bell (2225Hz) answer tone is generated depending on the selected configuration. Refer to "Cermetek AT commands and S-Registers Reference Guide" or the Cermetek web site at http://www.cermetek.com.

Data Encoding.

The data encoding conforms to CCITT recommendations V.22 bis or V.22, or Bell212A, or 103, depending on the selected configuration Refer to "Cermetek AT commands and S-Register Reference Guide" or the Cermetek web site at http //www cermetek com

Line Equalization.

Transmitter and receiver digital filters compensate for delay and amplitude distortion during operation on nominal phone lines In addition, automatic adaptive equalization in the receiver minimizes the effects of intersymbol interference

Transmission Speed.

In normal operation, the originating modem initiates the call and attempts to connect to the answering modem at a speed established by the originating modem's controller prior to call initiation This is referred to as the Initial Trained Rate Upon receiving the call, the answering modem will attempt to connect to the originating modem at its Initial Trained Rate.

If these two rates are identical, the connection is made. If the speeds differ, the answering modem must adjust its rate or terminate the call Table 1 indicates the connection rate that will result when the calling modem's Initial Trained Rate and the answering modem's Initial Trained Rate are different.

Note that a 2400 baud connection rate will only result if both modems are initially set at 2400 baud

Table 1. Connection Rates.

Answering Modem Initial Trained Rate	Connection Rate Resulting When Calling Modem Initial Trained Rate is.		
	300	1200	2400
300	300	1200	1200
1200	300	1200	1200
2400	300	1200	2400

©2000 Cermetek Microelectronics, Inc.

Zero Power Mode (CH1786ET only).

If an application calls for zero power during standby periods, the power may be switched off using external circuitry and the power applied when the CH1786 's RI pin becomes active. The CH1786ET products can thus be powered down to zero.

Figure 3. Zero Power Operation

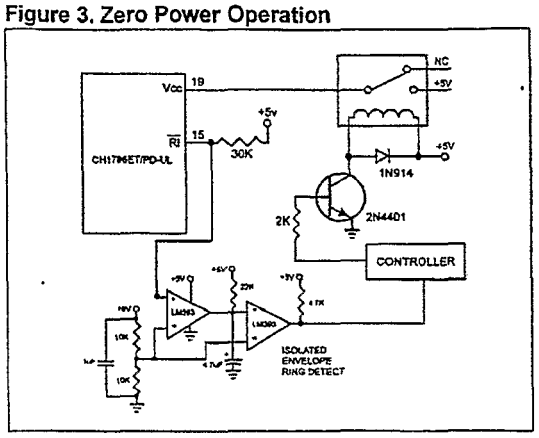

Referring to Figure 3, the controller activates the relay switch, supplying power (+5V to the CH1786ET-UL. In this configuration, the ring signal is used to "wake up "the CH1786ET-UL when the CH1786ET-UL is in the power down state

The pins of the CH1786ET-UL will be in an undefined state when power is switched off. This must be taken into consideration to assure that no unwanted signals are presented to the CH1786ET-UL during power down.

Ring Indicator (RI).

The RI pin follows the frequency of the ring signal and toggles low when the CH1786 detects an incoming call. The ring signal is typically 20 to 30 Hz and is on for 2 seconds and off for 4 seconds. Although not TTL compliant, the RI pin can, nonetheless, be utilized to activate external circuitry including the external RST pin.

When using the RI pin, it is recommended that a Schmitt Trigger or the Isolated Envelope Detect Circuit in Figures 3 or 5 be placed between the RI pin and the external load

Power Supply.

The CH1786 modem module is a complex set of sub-systems During the course of normal operation the CH1786 decodes analog signals from the telephone line that are in the millivolt range Steps must be taken by the user to guarantee that power supply noise on all supply lines, including ground, does not exceed 50 mV peak to peak Any frequency between 20 kHz and 150 kHz must be less than 500 micro volts peak. If necessary, use dedicated power and ground planes Failure to provide such operating conditions could cause the CH1786 to malfunction or to function erratically

The CH1786 requires a single +5V ±5%supply It is recommended that by-pass capacitors be placed on the power supply as close to the modem's supply input as practical. It's recommended a 10 µF Tantalum capacitor in parallel with a 0.01 µF ceramic capacitor be used

Voice/ Tone Injection Port.

The CH1786 provides two pins to allow the user to share the telephone line interface associated with the modem for voice and DTMF applications. Figure 4 contains a schematic indicating one possible configuration for voice/-tone utilization

WARNING: The CH1786 has been FCC Part 68 approved as a data modem only. Utilization of the Voice/Tone Port requires further registration. FCC will require that the system , including the CH1786 and the handset or DTMF transceiver, adhere to Part 68 rules. Voice/Tone Injection is not active on CH1786NH.

Figure 4. Voice/ Tone Injection

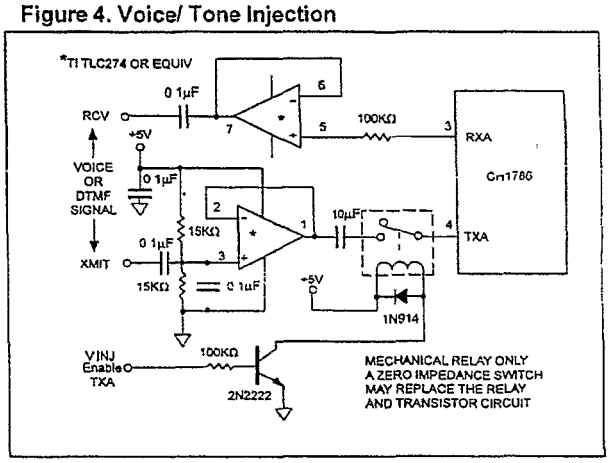

Typically, voice communication would precede data communications For this case, the following commands should be used to configure the CH1786 (Refer to Figure 4).

Enter: ATS0=[CR]	Disables auto-answer
Enter: ATS7=255[CR]	Eliminates hang-up due to
Enter: ATS10=255[CR]	lack of carrier signal

The following command sequences illustrate implementation of common Voice/Tone Port applications

1. To answer a voice call.
   (a) Enter: ATH1[CR]
   (b) Drive V.INJ. HIGH to activate relay.
   (c) Begin voice conversation.

2. To switch to data mode, drive V.INJ. LOW, then:
   (a) At the originate modem:
   Enter: ATX1[CR]

3. To disconnect (hang-up) a voice call or a data call
   Enter: ATH[CR]

4. To place a call using the CH1786's DTMF
   (a) Enter ATDT#;C0[CR]
   (b) Drive V.INJ high

©2000 Cermetek Microelectronics, Inc.

Figure 5. CH1786 Application Diagram

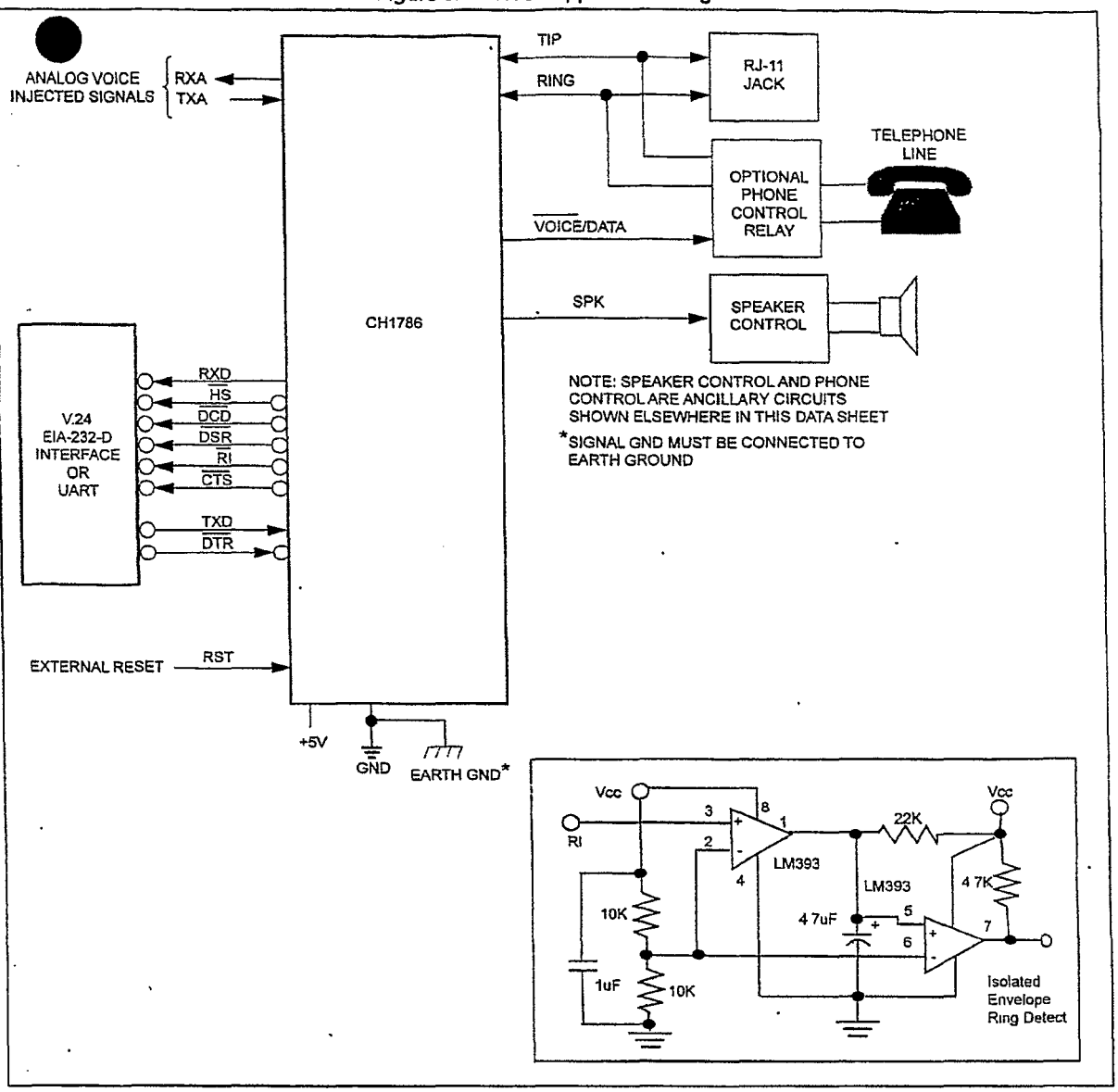

Table 2. CH1786 Pin Descriptions

PIN	NAME	TYPE	FUNCTION
1	RING	I/O	Directly connects to the telephone line's Ring lead through a user supplied RJ-11C jack.
2	TIP	I/O	Directly connects to the telephone line's Tip lead through a user supplied RJ-11C jack.
3	RXA	O	ANALOG VOICE INJECTED. Receive Signal Let float if not used. Not active in CH1786NH.
4	TXA	I	ANALOG VOICE INJECTED. Transmit Signal. Let float if not used. Not active in CH1786NH.

©2000 Cermetek Microelectronics, Inc.

Table 2. CH1786 Pin Descriptions (Continued)

5	SPK	O	SPEAKER Audio output for speaker See speaker control schematic in Figure 6
6	NC	-	No connection
7	NC	-	No connection
8	$\overline{\text{SLEEP}}$	O	SLEEP output A LOW indicates CH1786 is in low power idle mode Used to control power to other devices See Figure 6 Register S24 is the sleep timer register When the CH1786 is inactive for a period of time specified by S24, the CH1786 will power down by about 50% of its normal operating power During power down, all I/O lines become undefined The CH1786 products are shipped from the factory with a 5 second inactivity timer (ATS24=5) enabled
9	NC	-	No connection.
10	TXD	I	TRANSMIT DATA Serial Transmit data input Marking or a binary 1 condition is transmitted when a HIGH is asserted
11	RXD	O	RECEIVE DATA Serial Receive data output. Received marking or binary 1 condition is indicated by HIGH
12	$\overline{\text{V/D}}$	O	Voice/Data output is used to switch between telephone and modem line use In a typical application, V/D active HIGH opens the normally closed voice injection relay and disconnects the handset from the telephone line. See Figure 2
13	$\overline{\text{DTR}}$	I	DATA TERMINAL READY input Active LOW Switching off DTR can either return modem to command state, disconnect phone call, or reset modem DET should be set LOW when not used
14	$\overline{\text{DSR}}$	O	DATA SET READY output LOW indicates handshaking with a remote modem is in progress and/ or the data carrier of a remote modem has been detected
15	$\overline{\text{RI}}$	O	RING INDICATION. This signal follows the frequency of the ringing signal and is normally about 20 to 40 Hz for 2 seconds on with 4 seconds off
16	$\overline{\text{CTS}}$	O	CLEAR-TO SEND Output always LOW Reserved for flow control when using FAX option Currently, CTS only active on CH1786FX when S24=255 No power down mode option available Effective 31 May 2000, CTS will be active on CH1786 also
17	$\overline{\text{DCD}}$	O	DATA CARRIER DETECT LOW indicates a data carrier from a remote modem is detected
18	$\overline{\text{HS}}$	O	SPEED INDICATION HIGH speed select output A low on this pin indicates the modem is operating at 2400bps.
19	VCC	-	POWER SUPPLY 5 volts ± 5% Note. Noise should be less than 50mV peak to peak
20	GND	-	GROUND. Note. Noise should be less than 50mV peak to peak.
21	RST[1]	I	RESET input Active HIGH This input must be asserted HIGH for at least 10 ms to reset the modem RESET is then returned LOW for normal operation If no system reset is available, let this pin float to enable internal reset.
22	NC	-	No connection.

Note: (1) If VCC has a slow power up ramp time, the internal reset may be ineffective.

©2000 Cermetek Microelectronics, Inc

MODEM CONTROL

The CH1786 modem may be controlled by sending serial ASCII command sequences. The commands are sent to the modem serially on the TXD pin. After execution of a received command, the modem returns a serial status message that can be read on pin RXD This message indicates command completion status. Refer to Table 3 for a complete list of status messages.

INITIALIZING THE MODEM

Before commands may be sent to the CH1786,the modem must be initialized. This consists of two events:

1) Reset .This is accomplished by applying a hardware reset pulse to pin RST or by switching the power off and then back on

2) Initial modem training. The modem must be trained to the host 's speed (2400,1200,300bps) and parity (odd, even, mark, space or none).

These activities are briefly described below.

Reset.

Upon applying power to the CH1786, the CH1786 automatically generates an internal reset pulse. The user can also reset the modem externally by applying a high-going reset pulse to the RST pin for at least 10ms after the +5V power supply has stabilized. Delay sending commands to CH1786 for 200ms after reset has been initiated to allow the CH1786 time to properly reconfigure.

Training the Modem.

Each modem must be trained to match its host 's speed and parity so that it is able to recognize serial asynchronous commands sent to it by the host UART. The host must retrain the modem each time a reset pulse is applied on RST or after a RESET serial command has been issued

Modem Training Command Sequence.

The CH1786 is trained by sending it the following sequence:

Enter **AT [CR]**
Where **A** and **T** may be either upper or lower case but must be the same case.
[CR] represents carriage return

The "AT" sequence is referred to as an attention sequence. The CH1786 will respond with one of the following status messages, depending on whether it is optioned for abbreviated or English status messages.

Result **0 [CR]** (Abbreviated form)
Result. **[CR][LF] OK [CR][LF]** English form)
Where: **[CR]** represents carriage return (ASCII 13 or HEX 0D).
[LF] represents line feed (ASCII 10 or HEX 0A).

The modem is now in idle mode and is ready to accept commands. An alternate attention sequence "A/"may be sent which behaves much like the AT sequence except that it causes the previously entered command specified with an AT prefix to be executed. When given, it must be in upper case ASCII. No carriage return is needed.

THE COMMAND FORMAT

Typical commands consist of three elements: the attention sequence, the commands themselves, and a terminating carriage return.

AT [commands] [CR].

Where: AT represents attention sequence
[commands] represents command strings
[CR] represents carriage return (ASCII 13 or HEX 0D)

When entering commands to the modem, the backspace character-control-H (ASCII 8 or HEX 08)can be used to edit mistakes "AT "and "A/"may not be edited however. Multiple commands may be placed in the command line. A command line may be as long as 40 characters, excluding the letters AT By way of example, the command below instructs the CH1786 to configure itself to not echo characters when in command mode (E0)and then put itself in answer mode (A).

Enter:**ATE0A [CR]**

AT Command Set.

The available command set is divided into four types of commands: dial modifiers, basic commands, ampersand and percent commands. Refer to the complete list in Table 5

AT Command Data Rate.

With the serial interface, the rate is speed sensed for parity and format.

THE STATUS MESSAGES

The CH1786 responds with a status message after each command is executed. This status message may either be a single digit followed by a carriage return or a carriage return and line feed with a message in English, followed by a carriage return and line feed.

The basic status code subsets are enabled with the Xn command. Where n=0,1,2,3,4 establishes the result codes allowed by the user.

X0 -Result Codes 0, 1, 2, 3, 4 allowed
X1 -Result Codes 0, 1, 2, 3, 4, 5, 10 allowed
X2 -Result Codes 0,1, 2, 3, 4, 5, 6, 10 allowed
X3 -Result Codes 0, 1, 2, 3, 4, 5, 7, 10 allowed
X4 -Result Codes 0, 1, 2, 3, 4, 5, 6, 7, 10 allowed

The CH1786 is factory set to X4, which allows all result codes

Table 3. Summary of Result Codes and Meanings.

Result Codes	Status Message	Meaning
0	OK	Command executed
1	CONNECT	Carrier detected at 300 bps
2	RING	Ring detected
3	NO CARRIER	Did not detect carrier
4	ERROR	Entry error
5	CONNECT 1200	Carrier detected at 1200 bps
6	NO DIAL TONE	Off-hook, but no response after 5 seconds
7	BUSY	Busy signal detected
10	CONNECT 2400	Carrier detected at 2400 bps

©2000 Cermetek Microelectronics, Inc.

Table 4. CH1786 Register Summary

Register	Function
S0*	Ring to Answer On
S1	Ring Count
S2	Escape Code Character
S3	Carriage Return Character
S4	Line Feed Character
S5	Back Space Character
S6	Wait for Dial tone
S7	Wait for Data Carrier
S8	Pause Time for Comma
S9	Carrier Detect Response Time
S10	Lost Carrier to Hang-up Delay
S11	DTMF Dialing Speed
S12	Escape Code Guard Time
S14*	Bit Mapped Options Register
S16	Modem Test Options
S18*	Test Timer
S21*	Bit Mapped Options Register
S22*	Bit Mapped Options Register
S23*	Bit Mapped Options Register
S24	Sleep Mode Inactivity Time
S25*	Delay to DTR
S27*	Bit Mapped Options Register
S28*	Bit Mapped Options Register

*=S-Registers stored in NVRAM upon receipt of &W command

Table 5. CH1786 "AT" Command Set Summary

Basic Commands	Function
AT	Attention Code
A	Answer command
A/	Repeat last Command
*BN	Communications Standard Option
D	Dial Command
*E	Off-Line Character Echo Option
Hn	Switch Hook Control Option
*Ln	Speaker Volume Option
*Mn	Speaker Control Option
On	On-Line Command
P	Pulse Dial
*Qn	Result Code Display Option
Sn	Select an S Register
Sn=	Write to an S Register
Sn?	Read an S Register
*Vn	Result code Form Option
*Xn	Result Code Set/Call Progress Option
+++	Escape Code Sequence Pause
,	Pause
?	Returns Last addressed S Register
*Yn	Long Space Disconnect Option
Fn	On Line Echo character Option
Z	Reset

Table 6. Fax Command Set Summary

Fax Command	Function
+FCLASS=n	Select Service Class
+F<command>?	Report Active Configuration
+F<command>=?	Report Operating Capabilities
+FAA=n	Data/Fax Auto Answer
+FF	Enhanced Flow Control
+FTS=n	Stop Transmission and Wait
+FTSM=n	Transmit Data
+FTH=n	Receive Data
+FTH=n	Transmit Data with HDLC Framing
+FRH=n	Receive Data with HDLC Framing
+FRT=n	Receive Test Data
+FTTn=m	Transmit test Data

Dial Modifiers	Function
P	Pulse Dial
R	Originate Call in Answer Mode
T	Touch Tone Dial
W	Wait for Dial Tone
;	Return to Idle State
@	Wait for Quiet Answer Command
!	Flash Hook
,	Paul
0-9	Dial Digits/Characters
A,B,C,D	

Ampersand Commands	Function
*&Cn	Data Carrier Detect Option
*&Dn	Data Terminal Ready Option
&F	Load Factory Defaults
*&Gn	Guard tone Option
*&Pn	Make to Break Ratio Selection
*&Sn	Data Set Ready Option
&Tn	Test Command Option
&V	View Active Configuration
*&Wn	Store active profile
*&Yn	Recall active profile
*&Zn	Store telephone numbers

Percent Commands	Function
%Dn	DTMF Attenuation
%J	Load Secondary Factory Defaults

*=Commands that can be stored in NVRAM. Not supported by the CH1786LC or CH1786NH.

MODEM STATES

The CH1786 can be in either command mode or data mode When the modem is idle, it is in command mode by default and will recognize commands When data transmission is in progress, the CH1786 is in the data mode state and will not recognize commands To force the CH1786 to recognize commands, the host must send an "escape sequence " to the CH1786 forcing it out of data mode and into command mode.

The escape sequence consists of a "guard time" (a period where no characters are sent to the modem), followed by 3 escape characters, followed by another guard time. At power-up, the guard time is set to 1 second minimum, and the escape character is set as "+." These two parameters can be modified via registers S12 and S2, respectively

The CH1786 will stay off-hook with its carrier on after the escape sequence is received and it returns an OK status message when it is ready to accept commands. The CH1786 can be put into data mode by issuing the command ATO [CR].

NOTE: A detailed definition of all commands and registers is available from Cermetek Microelectronics, Inc. Refer to Cermetek Document "AT Commands and S-Registers Reference Guide" or access our web site at www.cermetek.com.

Confidential

AT COMMAND APPLICATIONS

Dialing A Phone Number.

The D command takes the form Dn, where n is a string of characters In the simplest form, n will be only the digits of the phone number to be dialed.

Example Dial number
Enter. AT D1234567

In response to this command, the CH1786 dials the telephone number "123-4567 " and then waits for a carrier from the distant modem If no carrier is detected within a given time (the default time is 30 seconds),the CH1786 automatically releases the line and sends a NO CARRIER result code. If a carrier is detected, the CH1786 gives a CONNECT result code and goes on-line, permit-ting communication with the distant modem.

The Dial Command may also be issued without a telephone number ATD causes the modem to pick up the telephone line without dialing a number.

Pause During Dialing.
When placing a call from an office with a telephone connected to a PBX, it may be necessary to dial an access code (usually the digit 9) to get an outside line Inserting a comma in the telephone number instructs the modem to pause for a specific length of time The factory set default pause time is 2 seconds.

Example· Dial 9,pause, dial number
Enter **AT DT9,1234567**

Multiple commas may be used to generate integer multiples of the specified delay time.

Originate a Call in Answer Mode.
The D command forces the modem into originate mode To call an originate-only modem, dial the number and set the modem to answer mode via the R command (reverse originate). This is done by including an R at the end of the telephone number.

Example· Change modem from original-only to answer mode.
Enter: **AT DT 1234567R**

Redial Last Number.
Use A/, the repeat command, to redial the last telephone number dialed

Return to Command State.
Example Touch-tone dial 9, pause, dial number, return for Command

Example	Touch-tone dial 9, pause, dial number, return for command
Enter	**AT DT9,1234567;**
Result	**OK**

Automatic Answering.

The S0 register controls the number of rings that must occur before the modem answers a call. The register may range in value from 0 to 255.

S0 =0 DO NOT ANSWER TELEPHONE
S0 =1 ANSWER ON RING 1
S0 =2 ANSWER ON RING 2
S0 =3 ANSWER ON RING 3
S0 =255 ANSWER ON RING 255
When S0 is set to 0,the modem will not auto-answer

The Serial Interface Lines.
The CH1786 supports a full EIA-232D/V 24 serial interface Signal levels are TTL rather than EIA-232D level compatible, which allows direct connection of the CH1786 to the host UART without level translating circuitry See Table 2 for a complete pin description

The modem is controlled by sending it serial commands over TXD and can be monitored by serial status messages returned on RXD. DTR is optionally used to reset, terminate calls or return CH1786 to command mode.

All other serial interface lines may be utilized for the convenience of a particular application but are not required by the CH1786. Unused outputs (from modem)should be left unconnected. Unused inputs should be set to the proper logic level. See Table 2

FAX MODES (CH1786FX only)*

The CH1786FX supports Send and Receive Fax in addition to the modem functions as defined by CH1786

FAX modes and rates are determined by the AT+F commands. Refer to Table 6

FAX modem processing is explicitly defined in CCITTV 29. CCITTV.27, and CCITT V.21 recommendations All modulation, wave-form spectrum, and data processing functions conform to the appropriate specifications

For additional information on CCITT recommendations, contact Omnicom, Tel 703-281-1135 or see CONEXANT's RC224ATF Designer 's Guide, Tel. 714-221-4600

Figure 6. Speaker Control Circuit— optional to allow for call progress monitoring.

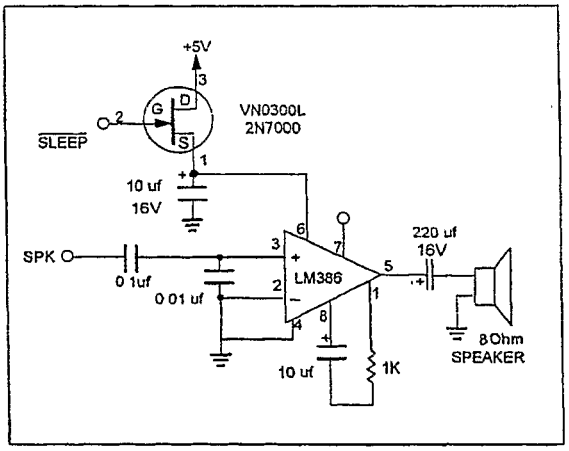

*Note: Currently the CH1786FX product performs the FAX function while the CH1786 does not Special order version of the CH1786 are available upon request that perform both data and FAX functions. Effective May 31, 2000 only the combined Data + FAX CH1786 will be available.

©2000 Cermetek Microelectronics, Inc.

PHONE LINE CONNECTION GUIDELINES

1) The CH1786 must be mounted in the final assembly such that it [redacted]lated from exposure to any hazardous voltages within the as[redacted]bly. Adequate separation and restraint of cables and cords must be provided.
2) The circuitry from the CH1786 to the telephone line interface must be provided in wiring that carries no other circuitry other than that specifically allowed in the FCC rules (such as A and A1 leads)
3) Connection to phone line should be made through an RJ-11C jack
4) PCB traces from the modem's RING and TIP pins to the RJ-11C jack must be 0.1 inch spacing or greater to one another and 0.2 inch spacing or greater to all other traces The traces should have a nominal width of 0.020 inches or greater.
5) The RING and TIP PCB traces should be as short as possible and oriented to prevent coupling other high speed or high frequency signals present on the host circuit PCB
6) No additional circuitry other than that shown in Figure 7A or 7B may be connected between the modem module and the RJ-11C jack. Doing so will invalidate the FCC approval.
7) The CH1786LC (only)requires external surge protection (see Figure 7B).This is mandatory to maintain FCC Part 68 conveyed approval
8) The CH1786,the RJ-11C jack, the interfacing circuitry and all PCB traces in between, must be contained on a PCB with a 94 V-0 flammability rating
9) The supplied FCC registration label must be applied visibly on the outside of the product.
10) The product 's User Manual must provide the user with instructions for connection and use as recommended in the FCC Registration Section below

CH1786 HANDLING AND ASSEMBLY RECOMMENDATIONS

The CH1786 contains static-sensitive components and should only be handled by personnel and in areas that are properly protected against static discharge There are two mounting techniques that are recommended for physically connecting the CH1786 to a PCB 1)sockets, and 2) direct soldering

Direct Soldering.

The CH1786 may be wave soldered onto a circuit card All CH1786 products are hermetically sealed (except the CH1786NH) and will not be harmed by industry standard wave soldering processes. Cermetek recommends against exposing the non-hermetic CH1786NH to aqueous based rinsing processes

Socketing.

The socketing approach to mounting eliminates cleaning and desoldering concerns When the socket is used, it must make a solid connection to all pins Failure to do so will cause unreliable or intermittent operation Also, steps should be taken to assure that the module remains tightly seated in the socket after the end product is shipped Cermetek recommends socket CES-150-01-T-S by Samtec, 50 pin strip socket

Figure 7A. PSTN Line Interface for CH1786 Family (except CH1786LC and CH1786NH).

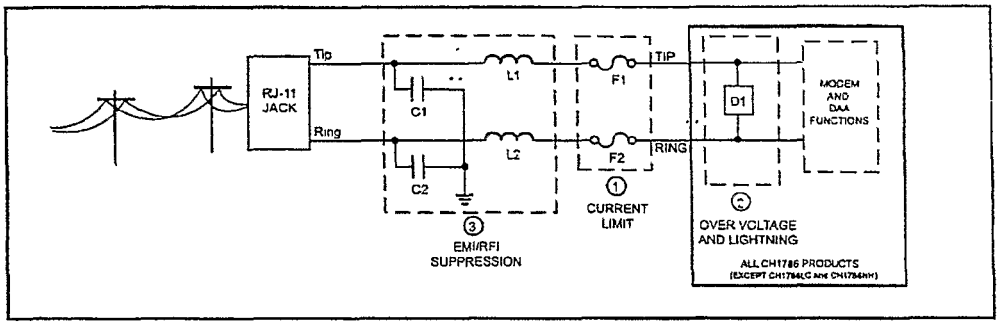

1. **Current Limiting PSTN Protection Line Device.**
Current limiting is mandatory to meet UL safety requirements. To maintain conveyed FCC Part 68 approval, the current limiting devices identified as F1 and F2 in dashed box #1 must also survive FCC Part 68 surge tests Use one of the external component schemes defined below in section 1A-1C to maintain compliance Reference Cermetek Application Note # 126 for more details

   A A Raychem Polyfuse TR 600-150 (rated at 0 15 amps) is preferred because this device resets automatically upon removal of the current flow Non-resetable devices such as Littlefuse, type 220003, or WICKMAN 19397-038 are also acceptable

   B Resistors (10Ω carbon film or 1/8 watt minimum) may be used in Canada as Canada has no requirement that PSTN equipment be operational after a Type B surge test.

   C Although CSA CS-03 Part 1 (Canada) follows the requirements of FCC Part 68 (USA), Cermetek recommends contacting DOT (Canada) and/or a certified independant lab to verify compliance. For Canada, use either 10Ω resistors (carbon film or SMD parts1/8 watt minimum) as described in paragraph B, above, or non-resetable fuses or resetable Polyfuses as described in paragraph A above

2. **Over Voltage and Lightning Protection.**
Surge Protection is provided by internal circuitry contained within the CH1786 Family (except CH1786LC and CH1786NH) No additional external components are required to maintain conveyed FCC Part 68 approval Refer to Cermetek Application Note #126 for more details

3. **EMI/RFI Suppression.**
No external EMI/RFI noise suppression circuitry is required to maintain conveyed FCC Part 68 approval However, additional suppression, if required for other reasons, may be added as described below in sections 3A-3B without adversely affecting the FCC Part 68 approval.

   A. To provide adequate EMI/RFI suppression, the capacitor/inductor network contained in dashed box #3 should be located as close to the RJ11 Jack as possible Further, this network should be provided with an excellent ground path to the chassis

   B Capacitors C1 and C2 should not exceed 0.005 µf They must have a rating of 1.5 KV and typically are .001 µf +/- 20% Recommended devices for inductors L1 and L2 are Fair-Rite 2643666611 or 2943668661 or equivalent For UL applications, choose capacitors and inductors that are UL 1950 listed. The actual values of the components used may vary depending on the end product design

DATASHEET4U.COM

Figure 7B. PSTN Line Interface for CH1786LC and CH1786NH only.

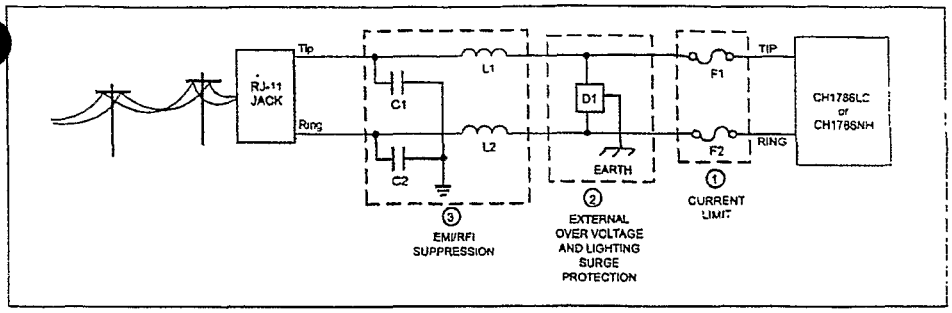

1 **Current Limiting PSTN Protection Line Device.**
Current limiting devices are mandatory to meet UL safety standards To maintain conveyed FCC Part 68 approval, the current limiting components identified as F1 and F2 in dashed box #1 must also survive FCC Part 68 surge testing Refer to Cermetek Application Note #126 for more details

A A Raychem Polyfuse TR 600-150 (rated at 0 15 amps) is preferred because this device resets automatically upon removal of the current flow Non-resetable devices such as Littlefuse, type 220003, or WICKMAN 19397-038 are also acceptable

B Resistors (10Ω carbon film or 1/8 watt minimum) may be used in Canada as Canada has no requirement that PSTN equipment be operational after a Type B surge test

C Although CSA CS-03 Part 1 (Canada) follows the requirements of FCC Part 68 (USA) Cermetek recommends contacting DOT (Canada) and/or a certifiec independant lab to verify compliance For Canada, use either 10Ω resistors (carbon film or SMD parts 1/8 watt minimum) as described in paragraph B above or non-resetable fuses or resetable Polyfuses as described in paragraph A above

2 **Over Voltage and Lightning Protection.**

A Over voltage and lightning surge protection is mandatory for FCC Part 68 compliance The required external surge protection (identified as D1 in dashed box 2) is mandatory and the purchaser must include some form of surge protection as described below to maintain conveyed FCC part 68 approval

B In most environments, 2 terminal surge suppressors are adequate For these applications, Cermetek recommends the use of Teccor Sidactor P/N 3100EB or equivalent. For severe environments, use the 3 terminal Teccor Sidactor P/N 3203AB or equivalent

3 **EMI/RFI Suppression.**
No external EMI/RFI noise suppression circuitry is required to maintain conveyed FCC Part 68 approval However, additional suppression, if required for other reasons, may be added as described below in sections 3A-3B without adversly affecting FCC Part 68 approval

A To provide adequate EMI/RFI suppression, the capacitor/inductor network contained in dashed box #3 should be located as close to the RJ11 Jack as possible Further, this network should be provided with an excellent ground path to the chassis

B Capacitors C1 and C2 should not exceed 0 005 µf They must have a rating of 1 5 KV and typically are 001 µf +/- 20% Recommended devices for inductors L1 and L2 are Fair-Rite 2643666611 or 2943666661 or equivalent For UL applications, choose capacitors and inductors that are UL 1950 listed The actual values of the components used may vary depending on the end product design

FCC REGISTRATION

All products in the CH1786 family are registered with the FCC (Federal Communications Commission) under Part 68 To maintain the validity of the registration, you must serve notice to the end user of the products of several restrictions the FCC places on the modem and its use

In addition to restriction notification, the FCC requires that Cermetek make all repairs to all products in the CH1786 family If repairs are necessary after installation of the CH1786 in the end product and the end product has been delivered to theend user, the end product must be returned to the end product supplier where the CH1786 can be removed and then forward to Cermetek for repair. The following notice is recommended and should be included in the end product's user manual

FOR YOUR USER'S MANUAL

The part 68 rules require the following (or equivalent) be provided to the end user of equipment containing a DAA:

Type of Service: The (insert end product name) is designed to be used on standard device telephone lines. It connects tot he telephone line by means of a standard jack called the USOC RJ-11C (or USOC RJ45S). Connection to telephone-company-provided coin service (central office implemented systems) is prohibited. Connection to party lines service is subject to state tariffs.

Changes in Attestation Procedure for Plugs and Jacks. (Name of applicant) attests that the network interface plugs or jacks used on this equipment comply with and will continue to comply with the mechanical requirements specified in Part 58, sub-part F, specifically the dimensions, tolerances and metallic plating requirements. The compliance of these connectors will be assured by purchase specifications and incoming inspection. Documentation of such specifications and/ or inspections will be provided to the FCC within 30 days of their request for the same.

Telephone Company Procedures: The goal of the telephone company is to provide you with the best service it can. In order to do this, it may occasionally be necessary for them to make changes in their equipment, operations or procedures. If theses changes might affect your service or the operation of your equipment, the telephone company will give you notice, in writing, to allow you to make any changes necessary to maintain uninterrupted service

In certain circumstances, it may be necessary for the telephone company to request information from you concerning the equipment which you have connected to your telephone line. Upon request of the telephone company, provide the FCC registration number and the ringer equivalence number (REN); both of these items are listed on the equipment label. The sum of all of the REN's on your telephone lines should be less than five in order to assure proper service from the telephone company In some cases, a sum of five may not be useable on given line Consult your telephone provider

If Problems Arise If any of your telephone equipment is not operating properly, you should immediately remove it from your telephone line, as it may cause harm to the telephone network. If the telephone company notes a problem, they may temporarily discontinue service. When practical, they will notify you in advance of this disconnection If advance notice is not feasible, you will be notified as soon as possible.

When you are notified, you will be given the opportunity to correct the problem and informed of your fight to file a complaint with the FCC. Contact your local telephone service provider if you have nay questions about your phone line.

In the event repairs are ever needed on the (insert your product name),they should be performed by (insert your company name) or an authorized representative of (insert your company name) For information contact (insert your company address)

DEFAULT STATUS, PERFORMANCE, AND SPECS

The following is a summary of the Default Configuration Profile installed by Cermetek Microelectronics, Inc prior to delivery of the CH1786.

Async mode selected
2400bps
Bell 212A operation at 1200bps
Even parity
Auto answer enabled (Disabled on CH1786NH)
Command echo ON
All result codes enabled –extended
Wait for dial tone before dialing =2 seconds
Detects busy signal
Full word result codes
Pulse dial make/break ratio =39/61
DSR enabled
Modem enabled DTR (Disabled on CH1786NH)
DCD enabled (Disabled on CH1786NH)
Speaker enabled but off when receiving carrier
Speaker volume set to medium
Local modem will grant RDL request from remote modem
Guard tones disabled
Minimum DTR pulse width =0.1 seconds
Ring count =01 (CH1786)
Escape code character =43
Carriage return character =13
Line feed character =10
Back space character =08
Duration of wait for dial tone =02 seconds
Duration of wait for carrier after dialing =30 seconds
Duration of dial pulse (comma)=02 seconds
Carrier detect response time =0.1 seconds
Escape code guard time =1 second
Length of use after comma =2 0 seconds
Last carrier to hang up delay =0 1 seconds
DTMF interdigit delay =0.1 seconds
DTMF Attenuation =-4dB
Sleep mode inactivity time =5 seconds
Long space disconnect disabled

Table 7. CH1786 System Data Mode Compatibility Specifications

Parameter	Specification	Parameter	Specification
Asynchronous	2400, 1200, 600 bps character asynchronous. 0-300 bps asynchronous	Receive Carrier Frequencies V.22 bis, V.22, 212A	Originate 2400 Hz ±7Hz Answer 1200 Hz ±7Hz
Asynchronous Speed Range	TXD may differ +1%, -2 5% from modem output. Offsets will be corrected by adding/deleting stop bits.	Bell 103	Answer 'space' 2020 Hz ± 7Hz Answer 'mark' 2225 Hz ± 7Hz Original 'space' 1070 Hz ± 7Hz Original 'mark' 1270 Hz ± 7Hz
Asynchronous Format	8, 9, 10 bits, including start, stop,parity	Receiver Sensitivity	OFF to ON threshold -43 dBm ON to OFF threshold -48 dBm
Telephone Line Interface	Two-wire full duplex over public switched network. On-chip hybrid and billing delay timers.	Billing Delay	2 0 to 3.0 seconds (T_A=25°C)
Modulation	V.22 bis, 16 point QAM at 600 baud. V.22 and 212A, 4 point DPSK at 600 baud 103 Binary phase coherent FSK.	Hysteresis	2 dB minimum
Self Test Pattern Generator	Alternate 'ones' and 'zeros' and error detector, to be used along with most loopbacks. A number indicating the bit errors detected is sent to DTE.	Line Equalization	Fixed compromise equalization. transmit Adaptive equalizer for PSK/QAM, receive
Transmit Carrier Frequencies V 22 bis,V.22, 212A	Originate 1200 Hz ± 01% Answer 2400 Hz ± 01%	Diagnostics Available	Local analog loopback Local digital loopback Remote digital loopback. Request remote digital loopback Local interface loopback modem with self test.
Bell 103	Originate 'space' 1070Hz ± .01% Originate 'mark' 1270Hz ± 01% Answer 'space' 2020Hz ± .01% Answer 'mark' 2225Hz ± .01%	Call Progess Tones Detected Computer Interface	With speaker or quiet screen messages (no dial tone, busy, ring-back, modem answer tone and voice). IBM PC/XT/AT bus compatible with an 8250/16450/16550A UART as a serial controller

Table 8. CH1786 Electrical Specifications

Parameter	Description	Min.	Typ.	Max.	Units
V_{cc}	Positive Supply voltage - Noise less than 50mV	4.75	5.0	5.25	V
I_{cc} Off Hook	Nominal Operating current when modem is OFF Hook		50	75	mA
I_{cc} On Hook	Nominal Operating Current when modem is ON Hook		25	50	mA
I_{CCPD}	Power Down Current			10	mA
V_{IH}	High Level Input Voltage	2			V
V_{IL}	Low Level Input Voltage	-0.3		0.8	V
I_{IN}	Input Leakage Current (TXD, DTR, RTS)	15		100	uA
I_{LO}	Leakage Current DCD, HS, RXD, SLEEP, DSR			10	uA
C_P	Capacitive Lead (TXT, DTR, RST)			10	pF
VT+	Positive Hysteresis Threshold for RESET pin		2.5		V
VT-	Negative Hysteresis Threshold for RESET pin		1.8		V
V_{OH}	High Level Output	2.4			V
V_{OL}	Low Level Output			0.6	V

©2000 Cermetek Microelectronics, Inc

Table 9. CH1786 Electrical Specifications

Parameter	Minimum	Typical	Maximum	Units	Comments
Off Hook Impedance	20			Ohm	
Trans Hybrid Loss		25		dB	600 Ohm RXA, TXA
Ring Voltage Loop	110V		250V	V_{pp}	On 48VDC line voltage for sustained periods
Line Loop Current – (Off-Hook)		20	100	mA	
Return Loss @ 1000 Hz		15		dB	600 Ohm
Ring Frequencies		40		Hz	
Receiver Insertion Gain	-0.5	0.0	+0.5	dBm	600 Ohm – Data Mode
Transmit Power		-9.5		dB	
First Character After Reset	0.5	1.0	5	sec	Delay
Inter Character Delay	20	50		msec	Between all command characters
Command Delay	100	200		msec	Between all AT commands
Minimum Reset Pulse Duration	10			msec	If user supplied

Table 10. Other Performance Specifications

Parameter	Min.	Typ.	Max	Units	Comments
Tone 2nd Harmonic Distortion			-35	dB	HYB enabled into 600Ω
DTMF Twist (Balance)		3		dB	
DTMF Tone Duration	50		255	ms	95 ms default
Pulse Dialing Rate	8	10	20	pps	10pps default
Pulse Dialing Make/ Break		39/61		%	US, Canada default
Pulse Dialing Make/ Break		33/67		%	UK, Hong Kong
Pulse Interdigit Interval	700		3000	ms	789 ms default
Guard Tone Frequency		550		Hz	Referenced to High Channel Transmit
Guard Tone Amplitude		-6		dB	Referenced to High Channel Transmit
Guard Tone Frequency		1800		Hz	Referenced to High Channel Transmit
Guard Tone Amplitude		-9		dB	Referenced to High Channel Transmit
High Channel Transmit Amplitude		-1		dB	Referenced to Low channel, Guard tone enabled
Guard Tone 2nd Harmonic Distortion		-40		dB	
Call Progress Passband Frequency	120		620	Hz	
Wait Time for Dial tone	2		255	sec	Two second default
Return loss @ 1000 Hz		30		dB	T_r = 600 Ω + 2.16 μ F

Table 11. Analog Characteristics

Name	Type	Characteristic	Value
SPK	O(DF)	Minimum Load	300Ω
		Maximum capacitive Load	0 01μ
		Output Impedance	10Ω
		Output voltage	2.5 ± 1 6V
		D.C. Offset	<20mV

©2000 Cermetek Microelectronics, Inc.

Table 12. Summary CH1786 Family of Products

Model	Summary of Features	Operating Temperature
CH1786LC	Full function, Voice/ Inject, FCC Part 68 Approved, UL 1950 Listed, Hermetic	0° C to 70°C
CH1786NH	Full Function, No Voice/Inject, FCC Part 68 Approved, Non-Hermetic, UL1950 Listed	0° C to 70°C
CH1786	Full Function, NVRAM, FCC Part 68 approved, UL1950 Listed, Hermetic	0° C to 70°C
CH1786ET	Full Function, NVRAM, Zero Power Option, FCC Part 68 Approved, UL1950 Listed, Hermetic	-40° C to 85°C
CH1786FX	Full Function + FAX, NVRAM, FCC Part 68 Approved, Hermetic, UL1950 Listed.	0° C to 70°C

Currently, both UL1459 and UL1950 Listed versions are available. Effective 31 May 2000, the higher performance UL1950 versions will become standard. Additionally, effective 31 May 2000, the combined data + FAX functions will become standard on the CH1786 thereby obsoleting the CH1786FX.

Figure 8. CH1786 Physical Dimensions and Pin Functions

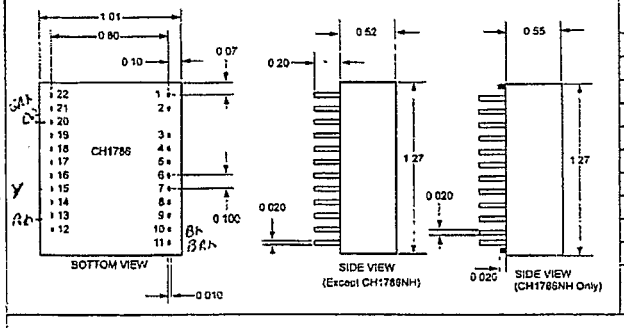

PACKAGE CONNECTION TABLE			
PIN NO	FUNCTION	PIN NO	FUNCTION
1	RING	12	V/D
2	TIP	13	DTR
3	RXA	14	DSR
4	TXA	15	RI
5	SPK	16	CTS
6	NC	17	DCD
7	NC	18	HS
8	SLEEP	19	VCC
9	NC	20	GND
10	TXD	21	RST
11	RXD	22	NC

1. All dimensions are in inches
2. Case dimensions are nominal ± 0 02 inches
3. Pin length is nominal ± 0.03 inches
4. Cermetek recommends that 0.04 inch diameter plated through holes are used with 0 060 inch diameter pads
5. Pin spacings are nominal.
6. CH1786NH has four 15mil round, 15mil high standoffs on the bottom of the package

***If a low profile version of the CH1786 is required, please see the CH2000.**

Cermetek reserves the right to make changes in specifications at any time and without notice The information furnished by Cermetek in this publication is believed to be accurate and reliable However, no responsibility is assumed by Cermetek for its use, or for any infringements of patents or other rights of third parties resulting from its use No license is granted under any patents or patent rights of Cermetek.

Printed in U S.A

406 TASMAN DRIVE | SUNNYVALE CA 94089 | LOCAL: 408-752-5000 | TOLL FREE: 1-800-882-6271 | FAX: 408-752-5004
WEB SITE: http://www.cermetek.com | EMAIL: sales@cermetek.com

©2000 Cermetek Microelectronics, Inc.